Products and prices

All prices in this catalogue are gross prices without VAT and valid until 01-07-2021. The prices shown following are in Euro. For UK customers please convert the Euro prices using the conversion rate available on www.fxcentre.com. Prices quoted using the rate on quotation date will remain valid for 30 days. Our prices are subject to change.

Contents

Gas-fired air heaters

GS+
Gas-fired high performance air heater with axial fan 10
High efficiency air heater with modulating premix burner for unrestricted outlet into the room.
Output from 13,6 to 142,2 kW.

GSX
Gas-fired air heater with axial fan 18
Air heater with premix burner for unrestricted outlet into the room.
Output from 16,7 to 83,9 kW.

SHOPHEATER
Gas-fired air heater with axial fan and compact design 26
Compact air heater with atmospheric burner and electrical ignition for unrestricted outlet into the room.
Output from 13,1 to 35,9 kW.

FÖHN
Gas and oil-fired heat air heater 31
Vertical or horizontal air heater with burner.
Output from 115 to 400 kW.

G-TYPE
Gas or oil-fired vertical air heater 36
Vertical or horizontal air heater with burner.
Output from 569,8 to 1047 kW.

Electric air heaters

TANNER MDE
Electric air heater with axial fan 40
Electric air heater
Output from 6 to 51 kW.

Hot water-supplied air heaters

TANNER MDA
Water-supplied air heater with axial fan 44
Water-supplied air heater with copper/aluminium heat exchanger.
Output from 14,5 to 117 kW.

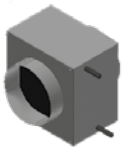

TANNER MD
Duct hot water heater 57
Duct hot water heater with copper/aluminium heat exchanger.
Output from 14,5 to 117 kW.

TANNER MBA
Water-supplied air heater with EC axial fan 60
Water-supplied air heater for ceiling installation with RAL9016 coating.
Output from 34,9 to 67,0 kW.

TANNER CLA
Water-supplied air heater for recessed ceiling system 64
Water-supplied air heater for system ceiling with a RAL9010 coating, suitable for heating and cooling.

LDA SWIRL
Water-supplied air heater with EC-fan 68
Water-supplied air heater with copper/aluminium heat exchanger. Air amounts from 500 to 2000 m³/h.

FAN COIL
Water-supplied decentral unit with EC-fan 71
Water-supplied decentral unit with EC-fan for heating and cooling. Air amounts from 170 to 910 m³/h.

Air curtains

EASYAIR
Water-supplied or electrical air curtain 74
Water-supplied or electrical air curtain for retail or industrial applications. Output from 10,17 to 67 kW.

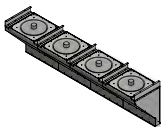

EASYAIR T200
Recirculation air curtain 82
Recirculation air curtain for industrial applications. Air displacement 11.200 to 36.600 m³/h.

EASYAIR DX
Air curtain with heat pump 85
Free-hanging, cassette and built-in air curtains Output from 8 to 16 kW

Gas-fired radiant heaters

INFRA
Gas-fired black radiant tube heater 90
Gas-fired black radiant tube heater with atmospheric burner and electrical ignition. Powers from 10 to 100 kW.

INFRA LINE
Gas-fired black radiant tube heater 98
Gas-fired black radiant tube heater with atmospheric burner and electrical ignition. Output from 50 to 200 kW.

INFRA HT
Gas-fired high temperature radiant heater 102
Gas-fired high temperature radiant heater with ceramic burner and electrical ignition. Output from 6.5 to 68.8 kW.

Electric radiant heating

INFRA ER 2600W
Electric infrared radiant heater 107
Output of 2600W

INFRA ER+ 2500W
Electric carbon infrared radiant heater 111
Output of 2500W

Water-supplied radiant heating

INFRA AQUA DESIGN
Water-supplied aluminium radiation panel 113
Aluminium radiation panel with a RAL 9010 coating.

INFRA AQUA ECO
Water-supplied steel radiation panel 116
Steel radiation panel, available in 4 or 6 metres as standard.

CEILFIT
Water-supplied radiation panel for grid type ceiling 119
Steel radiation panel, available in standard grid ceiling dimensions.

Ventilation and recirculation equipment

ECOFAN W
Recirculation fan 123
Recirculation fan with thermostatic control and isolator switch.
Air displacement 4,000 to 14,000m³/h.

ECOFAN P
Recirculation fan 126
Air displacement 22,000 m³/h.

MDV BLUE
Roof fan 128
Roof fan with centrifugal fan.
Air displacement 300 to 15,000 m³/h.

SUPPLY+EXTRACT FANS
Low noise ventilation boxes 136
Complete range of centrifugal ventilation units with very low noise level.

Air conditioning

TANNER MDC
Water-supplied air heater with centrifugal fan 137
Water-supplied air heater with copper/aluminium heat exchanger.
Output from 14,5 to 117 kW.

AIRSTREAM
Heat recovery unit 141
High-efficiency heat recovery unit.
Air displacement 600 to 45,000 m³/h.

COMPACT
Heat recovery unit 147
High-efficiency heat recovery unit.
Air displacement 600 to 3200 m³/h

ERV
Heat recovery unit 150
Compact high-efficiency heat recovery unit.
Air displacements of 500, 1000 and 2000 m³/h.

ERV MOBILE
Mobile ventilation-unit 154
Simple solution for temporary or permanent ventilation
Air displacement of 1000 m³/h

AHU
Air handling unit 158
Modular air handling unit, aluminium.
Double-walled insulation.

GC+
Condensing high efficiency air heater with centrifugal fan 166
High efficiency air heater with modulating premix burner including for duct connection.
Output from 15 to 150 kW.

CALFLO
Gas-fired make-up air heater 172
Air heater with burner located directly in the air flow.
Output from 64 to 896 kW.

COLDSTREAM
Adiabatic cooling 176
Sustainable ventilation and adiabatic cooling
Air displacement 20.000 and 25.000 m³/h.

Heat pumps

MARK HEAT PUMPS
Air-Water heat pumps 180
Wide range of heat pumps with various applications

HEAT PUMPS
DX-heat pumps and Air-Water heat pumps 190
Wide range of heat pumps with various applications

Dry Coolers

AWS
Dry coolers 194
Single row of fans

AWD
Dry coolers 198
Double row of fans

AWSV
Dry coolers 202
V-Dry coolers with a single row of fans

AWS-EPA
Dry coolers 206
Adiabatic dry coolers

Boilers

ECOFLEX
High efficiency boiler 210
Output from 168 to 294 kW.

POWERFLEX
High efficiency boiler 213
Output from 340 to 600 kW.

MEGAFLEX
High efficiency boiler 216
Output of 680 to 1020 kW.

MAXIFLEX
High efficiency boiler 219
Output of 2200 kW (2,2 MW).

Hydraulic bending machine

BENDER
Hydraulic pipe bending machine 220
Hydraulic pipe bending machine for bending thick-walled pipes.

Miscellaneous

CONTROL EQUIPMENT 223
Overview of the control options provided by Mark.

SUPPLY AIR SYSTEMS 240

New regulation EU 1253 regulates energy consumption of ventilation systems

The European Commission has determined requirements in the directive 2009/125/EG for the energy consumption of products regarding ecological design. The goal of this directive is to realise a considerable saving on the energy consumption and therewith a reduction of CO_2 emissions.

This has resulted in the establishment of regulation 1253/2014, which imposes requirements for the ecological design of ventilation units. These requirements have come into force by January 1st 2016 and will be further defined by January 1st 2018.

Ecodesign

The new regulation 1253/2014 for ventilation products determines that units for heated rooms with balanced ventilation need to include heat recovery. Earlier, ecodesign already resulted in Energy related Products (ERP) regulations for electric motors (640/2009) and fans (327/2011).

The goal of ecodesign is to save more than 4,1 billion GJ of energy. As a result, 233 million tonne of CO_2 emissions can be saved per year. In comparison, this amount equals what a forest as large as 5.5 times a country like The Netherlands can absorb per year.

This regulation is part of the CE mark and is not applicable to ventilation units for rooms with explosive or toxic air or air with extreme temperatures.

All Mark ventilation systems automatically meet the requirement of this new regulation.

The new regulation is applicable to the following ventilation units:

- Residential ventilation units (RVU): ventilation units with a maximum air flow of not more than 250m^3/h or with a maximum air flow between 250 and 1000 m^3/h, which according to the producer are exclusively intended for residential ventilation.

- Non-residential ventilation units (NRVU): ventilation units with a maximum air flow of more than 250 m^3/h, or with a maximum air flow of the ventilation unit between 250 and 1000 m^3/h, which according to the producer are not exclusively intended for residential ventilation. Mark NRVU's: Tanner MDA, Tanner MDC, AHU.

- Ventilation units (VU): these are electrical devices equipped with at least one impeller, one motor and one cabinet that are intended to replace polluted air with outdoor air in a building or part of a building. Mark VU's: Tanner MDA, Tanner MDC, Airstream, AHU, Föhn, Calflo.

- Unidirectional ventilation units (UVU): ventilation units that produce a flow in only one direction; from indoors to outdoors (exhaust air) or from outdoors to indoors (supply air), where the mechanical produced air flow is compensated by natural air supply or exhaust. Mark UVU's: Tanner MDA, Tanner MDC, Airstream, AHU, Föhn, Calflo.

- Bidirectional ventilation units (BVU): ventilation units that produce a flow from inside to outside and vice versa and that are equipped with both exhaust and supply fans. Mark BVU's: Airstream, AHU.

Consequences

From 2016 on, balanced ventilation systems for heated room (NRVU's) need to be equipped with heat recovery, like a heat wheel (HW) or a plate heat exchanger (PHE). In case of flows that are strictly separated from each other or flows that physically are not allowed to come together, a twin coil system should be installed.
All fans must be equipped with a multi-speed drive or a variable speed drive. The energy consumption of the fans is limited in relation to the heat recovery efficiency.
The HRS must also have a thermal by-pass facility.

Heat recovery	Efficiency dry		SFPint W/(m^3/S)	
	2016	2018	2016	2018
Twin-coil	63%	68%	1.400	1.300
PHE/HW	67%	73%	900	800

The consequences of this new regulation are that:

- Air treatment devices will become larger and will occupy more floor area (10 to 20%).
- Existing systems can hardly be replaced one-to-one anymore, but can still be renovated or adapted.
- Clients should clearly specify what they would like to have.
- The provided product information of the supplier to its customers will be more extensive.
- The supplier should declare through a DOP statement (DOP = Declaration of Performance) what it delivers.

The technical consequences of this new regulation are that:

- All ventilation units, with the exception of units for dual use, are equipped with a drive with different speeds or a drive with a variable speed.
- All BVU's feature a HRS (Heat Recovery System).
- The HRS is equipped with a thermal by-pass.
- The minimum thermal efficiency η_{t_nrvu} of all HRS with exception of circulation HRS in RVU amounts 67%.
- The minimum thermal efficiency η_{t_nrvu} of circulation HRS in BVU's amounts 63%.
- There are minimum efficiency requirements for the fans for UVU's (ηvu) that:
  - Amount 6.2 % * ln(P) + 35.0 % if P ≤ 30 kW, and
  - Amount 56,1 % if P > 30 kW;
- The maximum of internal specific fan power of ventilation parts (SFP_{int_limit}) amounts in W/(m^3/s):
  - For a BVU with circulation HRS:
    - 1 700 + E – 300 * *qnom*/2 – F if *qnom* < 2 m^3/s, and
    - 1 400 + E – F if *qnom* ≥ 2 m^3/s
  - For a BVU with another HRS:
    - 1200 + E – 300 * *qnom*/2 – F if *qnom* < 2 m^3/s, and
    - 900 + E – F if *qnom* ≥ 2 m^3/s
  - 250 for an UVU intended to be used with a filter.

GS+

GAS-FIRED AIR HEATER

Environmentally friendly heating with the GS+

Mark manufactures a gas-fired, high-performance air heater with an axial fan. This condensing equipment provides efficiency greater than 106% (lower value). Heat is generated via a modulating premix-burner which results in very low gas consumption.

The GS+ is operated using an Optitherm+ clock thermostat or an Interface+ module that allows a connection with the BMS (building management system) via Modbus or a 0-10V contact.
The Optitherm+ also makes it possible to control the GS+ units remotely with an app for mobile phone and tablet (available soon).

The GS+ is suitable in many situations due to its extensive capacity range from 13,6 to 142,2 kW.
The GS+ is designed to heat garages, warehouses, distribution centres and showrooms.

Features of the Mark GS+
- Efficiency >106%
- Energy-saving
- Environmentally-friendly
- Modulating premix burner
- Outlet temperature sensor
- Low temperature rise of the exit air
- Low thermal stratification of the heated air
- Stainless steel heat exchanger
- Corrosion-resistant aluzinc housing

Standard equipment
- Stainless steel combustion chamber & heat exchanger
- Closed combustion circuit
- Advanced modulating burner technology
- Electronic ignition
- Low NO_x
- Powerful axial fan(s)
- Downflow hood with horizontal louvres
- CE-approval
- PIN 0063BP3341
- Carbon trust (UK)

Optional: speed controlled low noise EC-motor. Advantages:
- The highest efficiency in case of speed control
- Up to 50% energy saving in case of partial load
- Almost completely linearly adjustable
- Long lifetime
- Low noise level
- Integrated electronic thermal protection

Dimensions

A = Horizontal louvres
B = Gas connection
C = Combustion air inlet
D = Flue gas exhaust
E = Electrical connection
F = Axial fan
G = Condensation connection diam. 40 mm

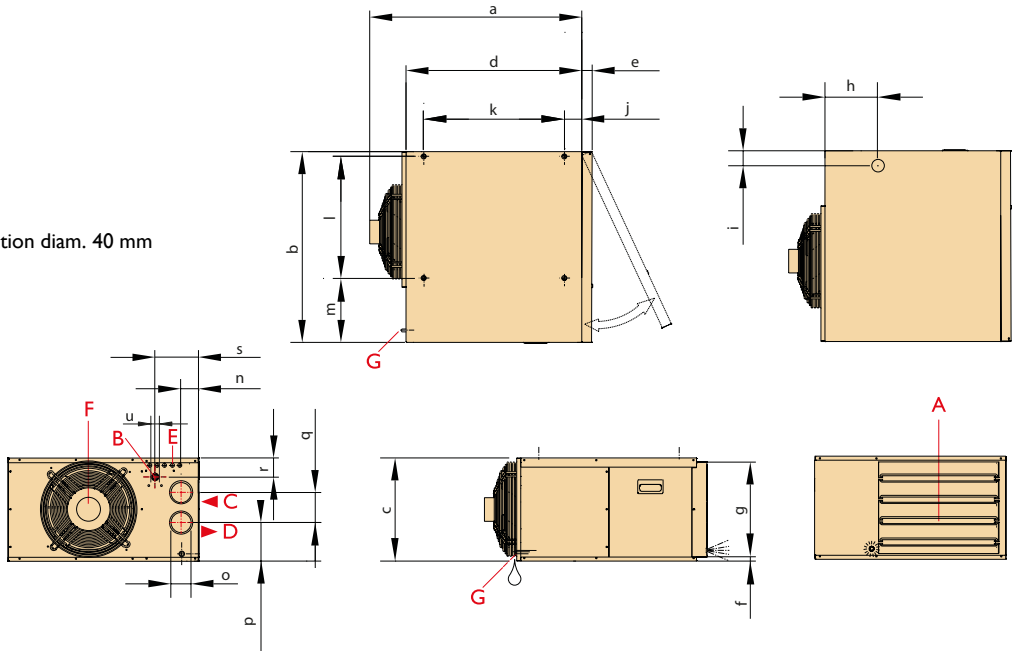

Type	a	b	c	d	e	f	g	h	i	j	k	l	m	n	o	p	q	r	s	u
15/25	790	760	410	700	40	15	380	210	60	70	560	485	255	70	80	150	120	80	175	1/2" (M)

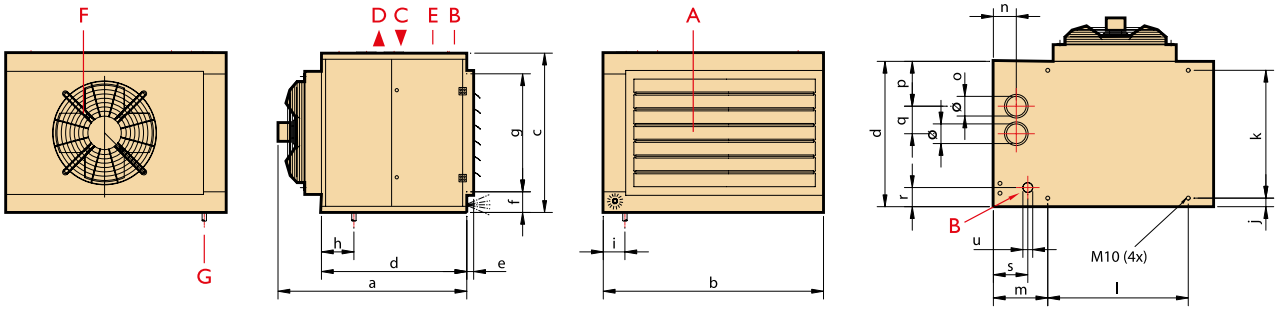

Type	a	b	c	d	e	f	g	h	i	j	k	l	m	n	o	p	q	r	s	u
35	969	875	810	739	35	105	600	165	110	90	560	470	275	120	80	240	120	97	135	3/4" (M)
40	969	875	810	739	35	105	600	165	110	90	560	470	275	120	80	240	120	97	135	3/4" (M)
60	969	1120	810	739	35	105	600	165	110	90	560	715	275	120	100	230	140	97	135	3/4" (M)
80	969	1305	810	739	35	105	600	165	110	90	560	890	275	120	100	230	140	97	135	1" (M)
100	979	1595	810	739	35	105	600	165	110	90	560	1180	275	120	100	230	140	97	135	1" (M)
135/150	1180	1890	1000	1000	35	105	790	190	175	75	850	1455	295	165	130	235	225	140	170	1" (F)

Technical information

Type		15	25	35	40	60	80	100	135	150
Nominal load (upper value)	kW	16,1	27,2	38,8	44,4	66,7	88,9	110,6	149,9	166,7
Maximal power	kW	13,6	23,0	33,4	38,4	56,2	75,6	93,3	128,9	141,0
Minimal load (upper value)	kW	4,6	6,8	9,6	9,6	13,9	24,5	10,8	21,1	36,6
Minimal power	kW	4,3	6,6	9,2	9,2	13,5	23,8	10,6	20,6	35,3
Flue efficiency at maximum load (lower value) on/off fan	%	94,1	93,9	95,1	95,1	93,6	94,0	93,8	95,5	94,0
Flue efficiency at maximum load (lower value) modulating fan	%	93,2	94,0	94,8	94,8	94,0	94,4	93,9	95,7	94,8
Flue efficiency at minimum load (lower value) on/off fan	%	106,7	107,0	106,9	106,9	107,3	107,1	107,4	107,5	107,3
Flue efficiency at minimum load (lower value) modulating fan	%	106,1	106,7	106,4	106,4	106,6	106,9	106,9	107,4	107,1
Burner turndown ratio	+/-	3:1	4:1	4:1	5:1	5:1	7:1	6:1	7:1	4:1
Gas consumption G20 (15°C)	m^3/h	1,50 - 0,41	2,54 - 0,57	3,62 - 0,89	4,15 - 0,90	6,22 - 1,07	8,29 - 1,27	10,30 - 1,68	13,99 - 1,76	15,57 - 3,68
Gas consumption G25 (15°C)	m^3/h	1,75 - 0,49	2,95 - 0,65	4,1 - 1,02	4,73 - 1,02	7,03 - 1,20	9,3 - 1,44	11,57 - 1,91	15,98 - 2,00	17,65 - 4,18
Air displacement (20°C) on/off fan	m^3/h	1410	2190	5000	5000	5300	9000	9800	16300	16300
Air displacement (20°C) modulating fan	m^3/h	850 - 1730	1090 - 2470	1350 - 3900	1350 - 3900	2700 - 5500	4500 - 8800	5400 - 9400	7350 - 14500	7350 - 16300
Delta T (ΔT) on/off fan	K	29,0 - 9,2	31,5 - 9,0	20,0 - 5,5	23,1 - 5,5	31,8 - 7,7	25,2 - 7,9	29,6 - 9,2	23,7 - 3,8	25,9 - 6,5
Delta T (ΔT) modulating fan	K	23,4 - 14,8	28,0 - 17,8	25,7 - 20,4	29,3 - 19,9	30,8 - 14,5	25,9 - 15,6	30,9 - 16,5	26,7 - 8,3	26,2 - 14,2
Throw	m	10 - 16	14 - 20	28 - 36	26 - 36	26 - 36	32 - 46	36 - 50	48 - 68	48 - 68
Weight of GS+	kg	50	56	95	95	111	136	155	228	230
Noise level (5 m, side) on/off fan	dB(A)	44	48	48	48	51	52	52	58	58
Noise level (5 m, side) modulating fan	dB(A)	44-31	48-31	47-31	47-31	51-33	49-33	52-34	55-34	55-34
Electrical power at 230V	W	100	175	290	290	340	480	510	1300	1300
Consumed current	A	0,5	0,8	1,4	1,4	1,6	2,3	2,5	5,9	5,9

Accessories – flue gas exhaust

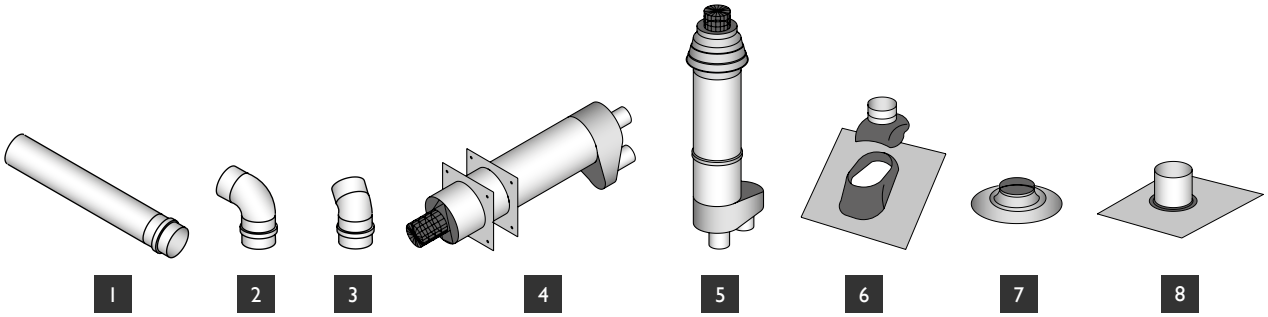

1 Extension set
2 90˚ elbow
3 45˚ elbow
4 Single flue set horizontal
5 Single flue set vertical
6 Roof flashing for pitched roof
7 Adhesive plate
8 Flexible roof flashing for cladded roof

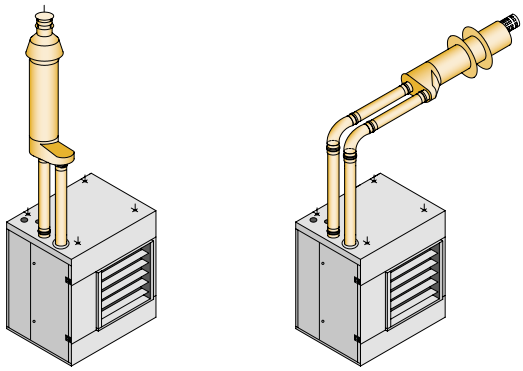

Accessories – additional sections

1 = Horizontal louvers (standard)
2 = Vertical louvres
3 = Downflow hood 45°
4 = Diffuser (2 x 45°) and horizontal louvres
5 = Vertical louvres for diffuser
6 = Set of wall mounting brackets
7 = Shock absorbers set
8 = Reversible wall bracket (types 15 - 60)

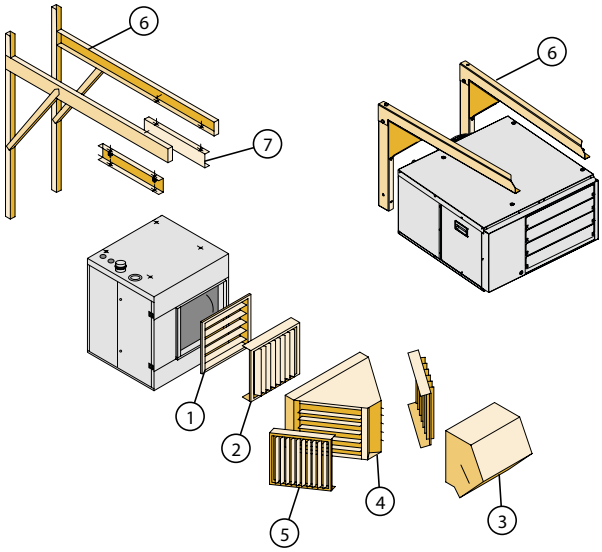

Assembly/location suggestions

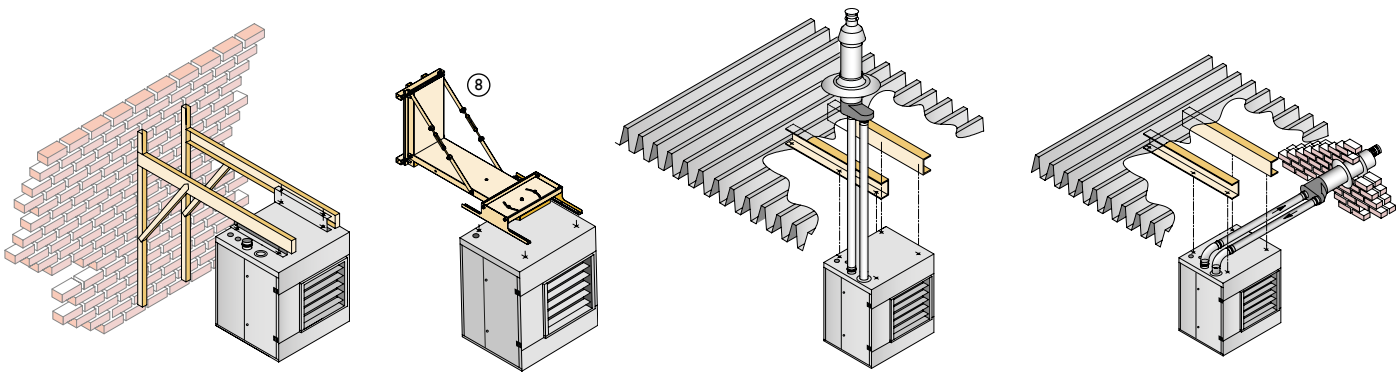

Controls

Installation with:
- Optitherm+
- Room temperature control

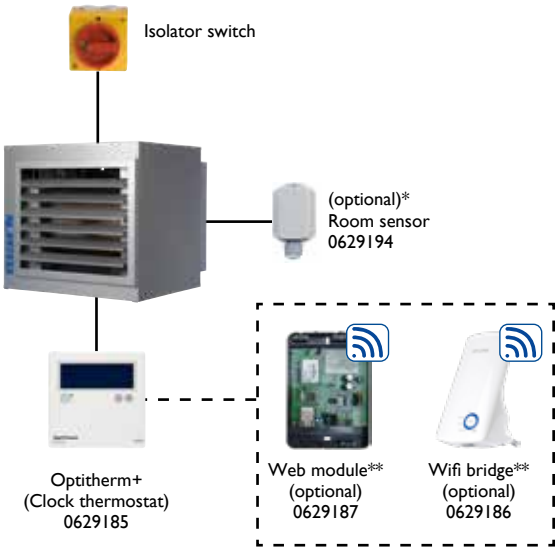

Installation with:
- Interface+
- Capacity control with external 0-10V signal or Modbus.

Installation with:
- Optitherm+ in combination with Interface+
- Room temperature control in combination with Modbus. Allows you to read the status and change the settings of the Optitherm+.

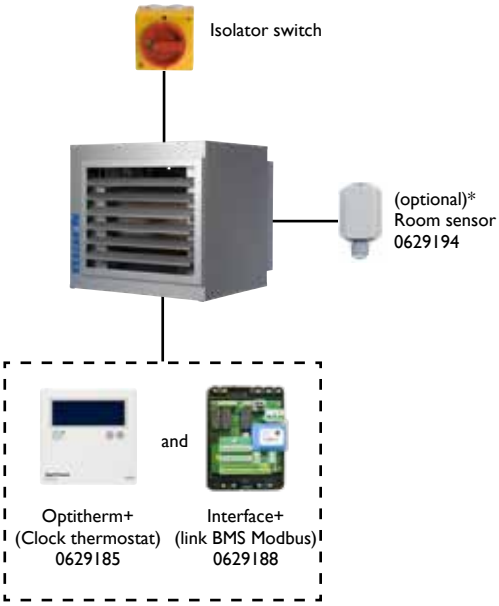

* Only in combination with Optitherm+

** A remote connection with the mobile phone app is only possible when using a Web module. A WiFi bridge can be added to create a wireless connection (available soon). NOTE: The use of a Web module, possibly in combination with a Wifi bridge, is not possible when using an Interface+.

Installation with:
- Optitherm+
- Room temperature control

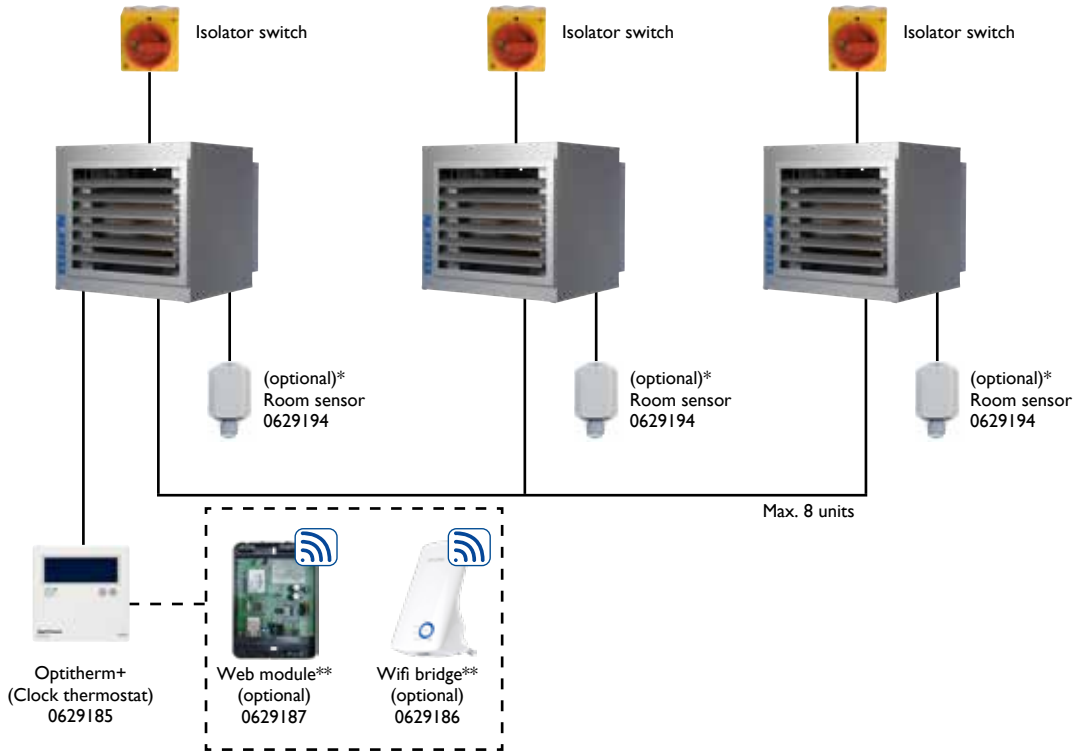

Installation with:
- Optitherm+ in combination with Interface+
- Room temperature control in combination with Modbus. Allows you to read the status and change the settings of the Optitherm+.

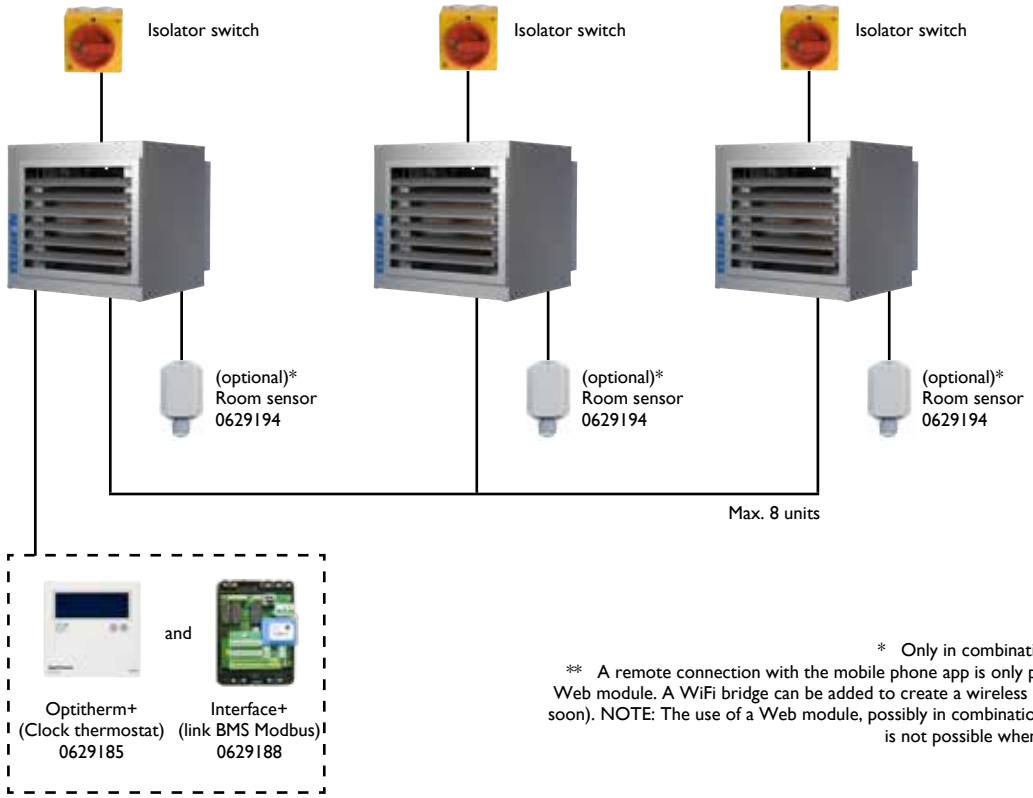

* Only in combination with Optitherm+

** A remote connection with the mobile phone app is only possible when using a Web module. A WiFi bridge can be added to create a wireless connection (available soon). NOTE: The use of a Web module, possibly in combination with a Wifi bridge, is not possible when using an Interface+.

Prices Mark GS+

PRODUCT - GAS-FIRED CONDENSATING AIR HEATER GS+

Code nr.	Description	Price
	GS+ 15, gas-fired condensating air heater, 13,6 kW	€ 3104
	GS+ 25, gas-fired condensating air heater, 23,0 kW	€ 3280
	GS+ 35, gas-fired condensating air heater, 33,4 kW	€ 4625
	GS+ 40, gas-fired condensating air heater, 37,9 kW	€ 4625
	GS+ 60, gas-fired condensating air heater, 56,5 kW	€ 5749
	GS+ 80, gas-fired condensating air heater, 75,4 kW	€ 6927
	GS+ 100, gas-fired condensating air heater, 97,0 kW	€ 7897
	GS+ 135, gas-fired condensating air heater, 128,3 kW	€ 9470
	GS+ 150, gas-fired condensating air heater, 142,2 kW	€ 11164
	Additional cost for non-standard operating side type GS+ 35-100	€ 415
	Additional cost for non-standard operating side type GS+ 135/150	€ 620

PRODUCT - GAS-FIRED CONDENSATING AIR HEATER GS+ WITH MODULATING EC FAN

Code nr.	Description	Price
	GS+ 15, gas-fired condensating air heater with modulating EC fan, 13,6 kW	€ 3633
	GS+ 25, gas-fired condensating air heater with modulating EC fan, 23,0 kW	€ 3810
	GS+ 35, gas-fired condensating air heater with modulating EC fan, 33,4 kW	€ 5266
	GS+ 40, gas-fired condensating air heater with modulating EC fan, 37,9 kW	€ 5266
	GS+ 60, gas-fired condensating air heater with modulating EC fan, 56,5 kW	€ 7897
	GS+ 80, gas-fired condensating air heater with modulating EC fan, 75,4 kW	€ 8078
	GS+ 100, gas-fired condensating air heater with modulating EC fan, 97,0 kW	€ 9236
	GS+ 135, gas-fired condensating air heater with modulating EC fan, 128,3 kW	€ 11939
	GS+ 150, gas-fired condensating air heater with modulating EC fan, 142,2 kW	€ 13632

ACCESSORIES - EXHAUST OUTLET

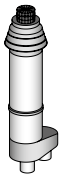

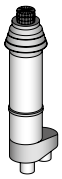

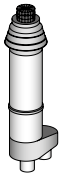

Code nr.	Description	Price
	GS+ 15, GS+ 25, GS+ 35 and GS+ 40	
5990557	Single flue set vertical, stainless steel ø 80 mm, external diameter 130mm	€ 181
5990581	Single pipe horizontal, stainless steel ø 80 mm, external diameter 130mm	€ 145
5990201	Set 2 pipes stainless steel, ø 80 mm, length 500 mm	€ 58
5990202	Set 2 pipes stainless steel, ø 80 mm, length 1000 mm	€ 96
5990203	Set smooth elbows stainless steel, ø 80 mm, 90°	€ 105
5990204	Set smooth elbows stainless steel , ø 80 mm, 45°	€ 94
5990230	Reducer kit ø 80-100 mm	€ 224
0540927	Roof flashing ø 80 mm, only in combination with 5990557	€ 33
3040927	Adhesive coated roof flashing for plastic roofing, only in combination with 5990557	€ 61
0540807	Dektite 4-7", only in combination with 5990557	€ 108
0540804	Roof flashing 20 to 35°, only in combination with 5990557	€ 52
	GS+ 60, GS+ 80, GS+ 100*	
5990561	Single flue set vertical, stainless steel ø 100 mm, external diameter 160mm	€ 363
5990585	Single pipe horizontal, stainless steel ø 100 mm, external diameter 160mm	€ 234
5990211	Set 2 pipes stainless steel, ø 100 mm, length 500 mm	€ 84
5990212	Set 2 pipes stainless steel, ø 100 mm, length 1000 mm	€ 145
5990213	Set smooth elbows stainless steel, ø 100 mm, 90°	€ 104
5990214	Set smooth elbows stainless steel, ø 100 mm, 45°	€ 90
5990240	Reducer kit GS+ 100*, ø 100-130 mm	€ 290
0540929	Roof flashing ø 100 mm, only in combination with 5990561	€ 35
3040929	Adhesive coated roof flashing for plastic roofing, only in combination with 5990561	€ 83
0540807	Dektite 4-7", only in combination with 5990561	€ 108
0540806	Roof flashing 20 to 35°, only in combination with 5990561	€ 80
	GS+ 100*, GS+ 135, GS+ 150	
5990564	Single flue set vertical, stainless steel ø 130 mm, external diameter 200mm	€ 741
5990589	Single pipe horizontal, stainless steel ø 130 mm, external diameter 200mm	€ 386
5990221	Set 2 pipes stainless steel, ø 130 mm, length 500 mm	€ 161
5990222	Set 2 pipes stainless steel, ø 130 mm, length 1000 mm	€ 224
5990223	Set smooth elbows stainless steel, ø 130 mm, 90°	€ 295
5990224	Set smooth elbows stainless steel, ø 130 mm, 45°	€ 224
0540626	Roof flashing ø 100 mm, only in combination with 5990564	€ 51
0540812	Roof flashing 20 to 35° only in combination with 5990564	€ 139
3040626	Adhesive coated roof flashing for plastic roofing, only in combination with 5990564	€ 116

ACCESSORIES

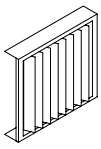

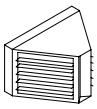

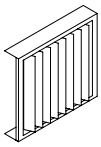

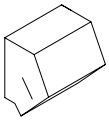

Code nr.	Description	Price
5008533	Vertical louvre GS+ 15/25	€ 117
5008534	Vertical louvre GS+ 35/40	€ 127
5008536	Vertical louvre GS+ 60	€ 145
5008538	Vertical louvre GS+ 80	€ 181
5008540	Vertical louvre GS+ 100	€ 191
5008542	Vertical louvre GS+ 135/150	€ 201
5008554	Diffuser with horizontal louvre GS+ 35/40	€ 397
5008556	Diffuser with horizontal louvre GS+ 60	€ 451
5008558	Diffuser with horizontal louvre GS+ 80	€ 626
5008560	Diffuser with horizontal louvre GS+ 100	€ 825
5008562	Diffuser with horizontal louvre GS+ 135/150	€ 989
5008574	Vertical louvre for diffuser GS+ 35/40	€ 181
5008576	Vertical louvre for diffuser GS+ 60	€ 181
5008578	Vertical louvre for diffuser GS+ 80	€ 191
5008580	Vertical louvre for diffuser GS+ 100	€ 247
5008582	Vertical louvre for diffuser GS+ 135/150	€ 322
5008544	Downflow hood 45° GS+ 35/40	€ 530
5008546	Downflow hood 45° GS+ 60	€ 662
5008548	Downflow hood 45° GS+ 80	€ 777
5008550	Downflow hood 45° GS+ 100	€ 1006
5008552	Downflow hood 45° GS+ 135/150	€ 1170

ACCESSORIES - CONTROL

Code nr.	Description	Price
0629185	Optitherm+ digital clock thermostat	€ 295
0629194	External room temperature sensor	€ 64
0629188	Interface+	€ 249
0629187	Web module	€ 332
0629186	WiFi bridge	€ 250
3000600	Data cable JY(st)Y Dca 1x2x0.8+0.8mm GY (12,5 m)	€ 25
3000601	Data cable JY(st)Y Dca 1x2x0.8+0.8mm GY (25 m)	€ 47
3000602	Data cable JY(st)Y Dca 1x2x0.8+0.8mm GY (100 m)	€ 177
0631162	Isolator switch, separate delivery, 230 Volt (2 poles)	€ 56
5017097	Isolator switch, pre-wired, 230 Volt (2 poles)	€ 90

For function explanation see chapter on control

ACCESSORIES - CONDENSATE

Code nr.	Description	Price
3100562	Condensate pump kit for GS+ 15/25 (separate delivery)	€ 374
3100565	Condensate pump kit for GS+ 35/40/60/80/100 (separate delivery)	€ 384
3100564	Condensate pump kit for GS+ 135/150 (separate delivery)	€ 396
3100586	Condensate neutralizing kit (separate delivery)	€ 105
3100589	Tube extension kit DN10 25 meter	€ 99
5990620	Single flue set vertical, stainless steel ø80mm, external diameter 130mm, with condensation drain	€ 302
5990625	Single flue set vertical, stainless steel ø100mm, external diameter 160mm, with condensation drain	€ 480
5990630	Single flue set vertical, stainless steel ø130 mm, external diameter 200mm, with condensation drain	€ 841
3100552	Condensate pump kit for GS+ 15/25 (only in combination with 5990620)	€ 394
3100553	Condensate pump kit for GS+ 35-100 (only in combination with 5990620/5990625)	€ 394
3100555	Condensate pump kit for GS+ 135/150 (only in combination with 5990630)	€ 394

ACCESSORIES - ASSEMBLY

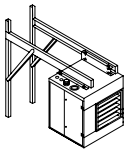

Code nr.	Description	Price
3187220	Set wall mounting brackets (2 pieces), GS+ 15/25	€ 206
5017620	Set wall mounting brackets (2 pieces), GS+ 35/40/60/80/100	€ 241
5017627	Set wall mounting brackets (2 pieces), GS+ 135/150	€ 347
5017621	Set shock absorbers for wall mounting brackets, GS+ 35/40/60/80/100	€ 105
5017628	Set shock absorbers for wall mounting brackets, GS+ 135/150	€ 139
5017590	Reversible wall brackets GS+ 15/25	€ 301
5017573	Reversible wall brackets GS+ 35/40	€ 301
5017576	Reversible wall brackets GS+ 60	€ 301

ACCESSORIES - COLOURS ***

Description	Price
GS+ provided with colour	€ 255
Accessories provided with colour 1 to 3 pieces (by piece)	€ 125
Accessories provided with colour 4 to 10 pieces (by piece)	€ 110
Accessories provided with colour for more than 10 pieces (by piece)	€ 75

REMARK

CE-approval only applies when the unit is supplied with the corresponding flue gas system.

* For GS+ 100 with long flue gaspipes, use ø 100-130 mm transition piece. See Technical manual.
*** These prices are only for the Mark standard RAL-colours: 3002 red, 1028 yellow, 6010 green, 7016 gray, 8014 brown, 9001 beige white, 5009 blue, 2009 orange, 1019 beige

GSX

GAS-FIRED AIR HEATER

Economical heating with the GSX

With the Mark GSX heat is generated via a premix-burner and blown out by means of an axial fan. The robust air heater is particularly suitable for industrial use and is very economical thanks to its low gas consumption, low maintenance and long lifespan.

The GSX is operated using an Optitherm+ clock thermostat or an Interface+ module that allows a connection with the BMS (building management system) via Modbus or a potential free contact.
The Optitherm+ also makes it possible to control the GSX units remotely with an app for mobile phone and tablet (available soon).

The Mark GSX series fully complies to the new Ecodesign 2018 and has a capacity range of 16,7 to 83,9 kW.
The GSX is suitable to heat garages, warehouses, workshops, distribution centers, showrooms and more.

Features of the Mark GSX
- Long lifespan
- Low operating costs
- Robust
- Reliable
- Uniform temperature distribution through high air displacement
- Small difference between supply air and room temperature
- Control up to 8 units possible via a 2-wire bus system
- Zone heating possible via 1 control (up to 8 zones)

Standard equipment
- Stainless steel heat exchanger
- Closed combustion circuit
- Premix burner
- Electronic ignition
- Aluzinc coating
- Powerful axial fan(s)
- Downflow hood with horizontal louvres
- CE-approval
- **No condensation pipe required**

mark®

Dimensions

A = Horizontal louvres
B = Gas connection
C = Combustion air inlet
D = Flue gas exhaust
E = Electrical connection
F = Axial fan

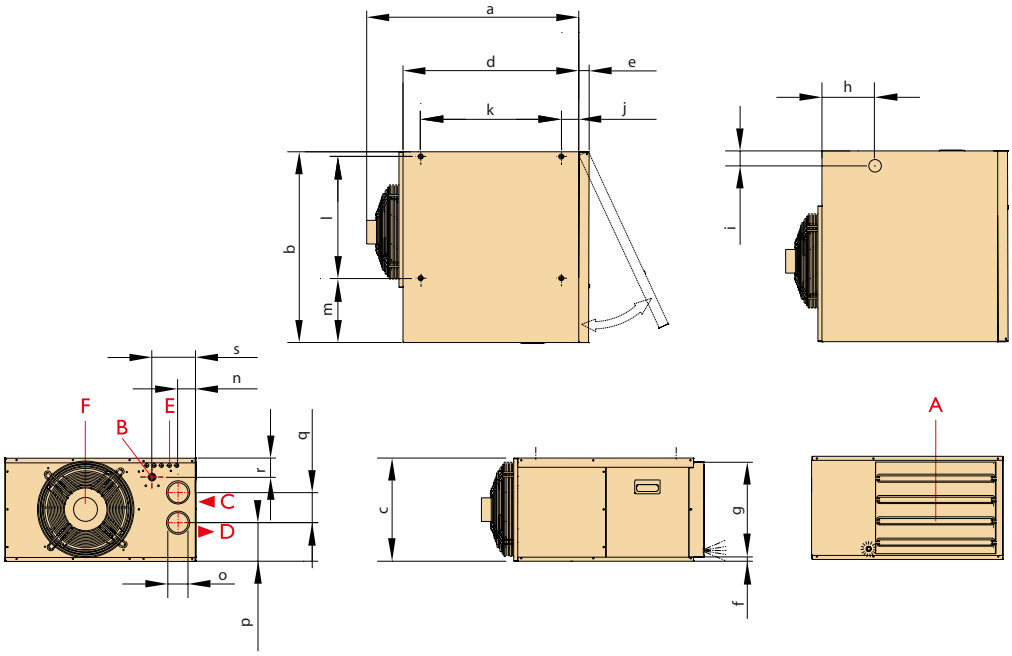

Type	a	b	c	d	e	f	g	h	i	j	k	l	m	n	o	p	q	r	s	u
20	790	760	410	700	40	15	380	210	60	70	560	485	255	70	80	150	120	80	175	1/2" (M)

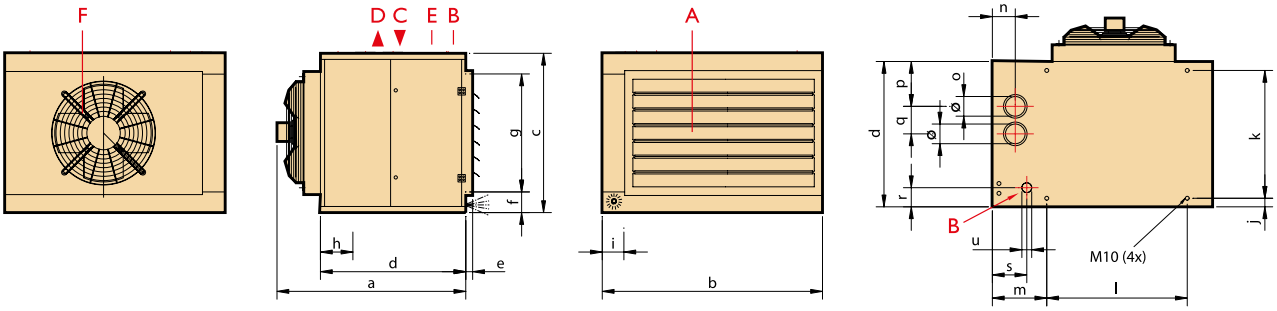

Type	a	b	c	d	e	f	g	h	i	j	k	l	m	n	o	p	q	r	s	u
35	969	875	810	739	35	105	600	165	110	90	560	470	275	120	80	240	120	97	135	3/4" (M)
55	969	1120	810	739	35	105	600	165	110	90	560	715	275	120	100	230	140	97	135	3/4" (M)
75	969	1305	810	739	35	105	600	165	110	90	560	890	275	120	100	230	140	97	135	1" (M)
90	979	1595	810	739	35	105	600	165	110	90	560	1180	275	120	100	230	140	97	135	1" (M)

Technical information

Type		20	35	55	75	90
Nominal load (lower value)	kW	18,0	34,9	51,3	72,0	90,0
Nominal load (upper value)	kW	20,0	38,8	57,0	80,0	100,0
Nominal power	kW	16,7	32,7	48,4	67,3	83,9
Flue efficiency (lower value)	%	93,6	94,3	94,9	94,2	93,9
Gas consumption G25 (15°C)	m^3/h	2,2	4,2	6,19	8,69	10,86
Gas consumption G20 (15°C)	m^3/h	1,9	3,7	5,43	7,62	9,52
Air displacement (20°C)	m^3/h	2400	4500	5900	9000	11600
Delta T (ΔT)	K	20,9	21,8	24,6	22,4	21,7
Throw	m	14	28	26	32	36
Weight	kg	50	89	101	123	139
Noise level (5 m, side)	dB(A)	48	48	51	52	52
Electrical power at 230V	W	180	280	370	680	740
Consumed current	A	0,8	1,2	1,7	3,0	3,3

Accessories – flue gas exhaust

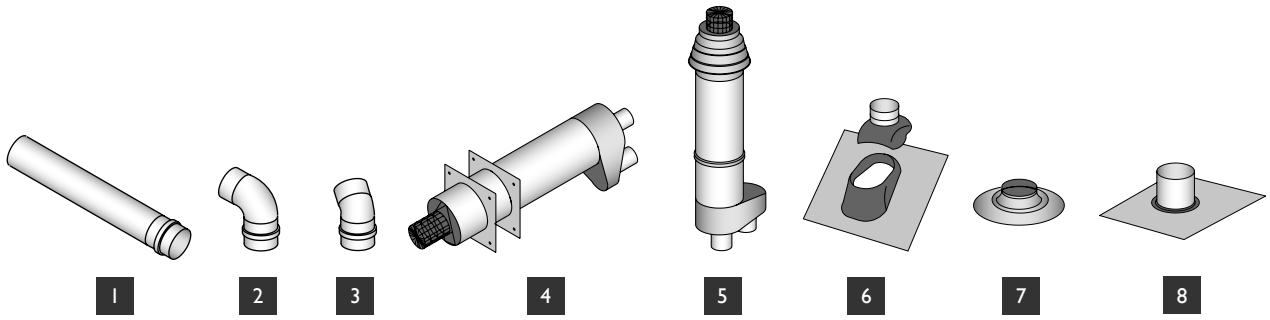

1 Extension set
2 90° elbow
3 45° elbow
4 Single flue set horizontal
5 Single flue set vertical
6 Roof flashing for pitched roof
7 Adhesive plate
8 Flexible roof flashing for cladded roof

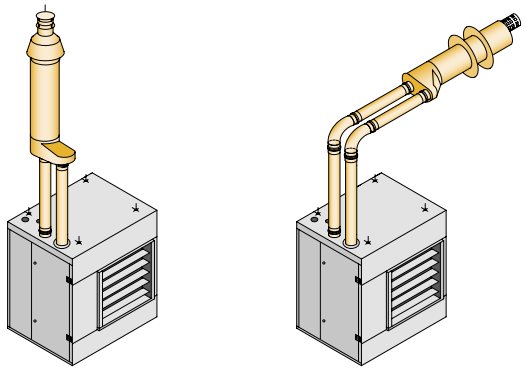

Accessories – additional sections

1 = Horizontal louvers (standard)
2 = Vertical louvres
3 = Downflow hood 45°
4 = Diffuser (2 x 45°) and horizontal louvres
5 = Vertical louvres for diffuser
6 = Set of wall mounting brackets
7 = Shock absorbers set
8 = Reversible wall bracket (types 20 - 55)

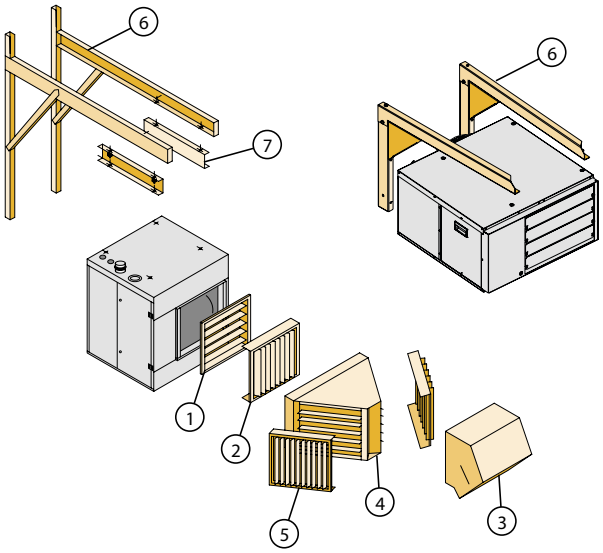

Assembly/location suggestions

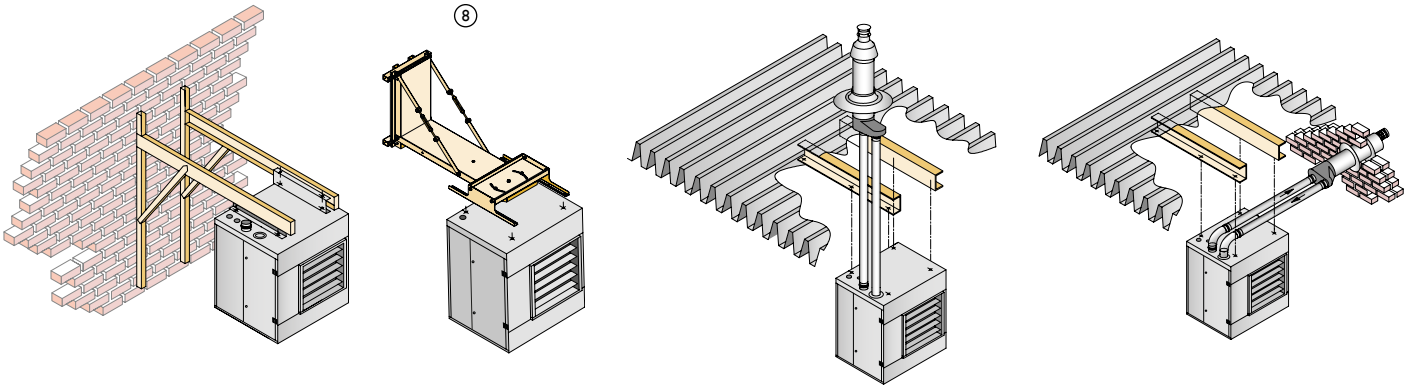

Controls

Installation with:
- Optitherm+
- Room temperature control

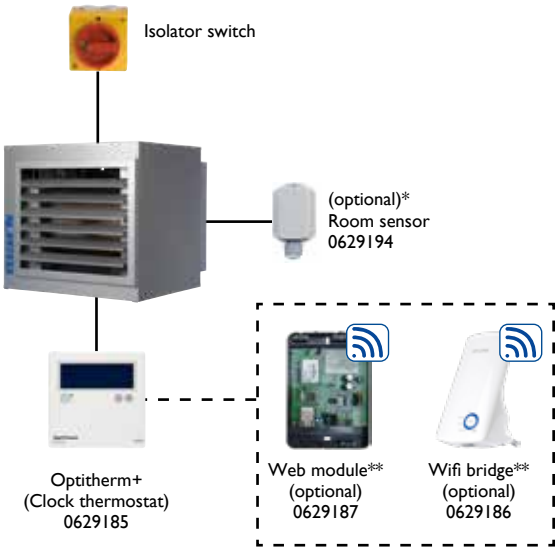

Installation with:
- Interface+
- External signal through potential free contact
- Heating / Continuous ventilation / reset contacts / Modbus reading

Installation with:
- Optitherm+ in combination with Interface+
- Room temperature control in combination with Modbus. Allows you to read the status and change the settings of the Optitherm+.

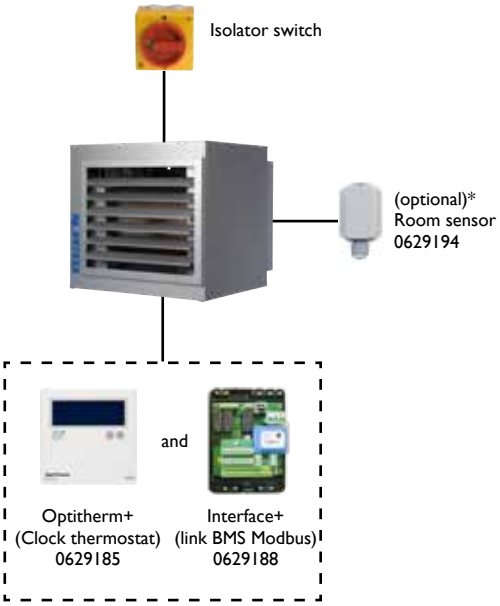

* Only in combination with Optitherm+

** A remote connection with the mobile phone app is only possible when using a Web module. A WiFi bridge can be added to create a wireless connection (available soon). NOTE: The use of a Web module, possibly in combination with a Wifi bridge, is not possible when using an Interface+.

Installation with:
- Optitherm+
- Room temperature control

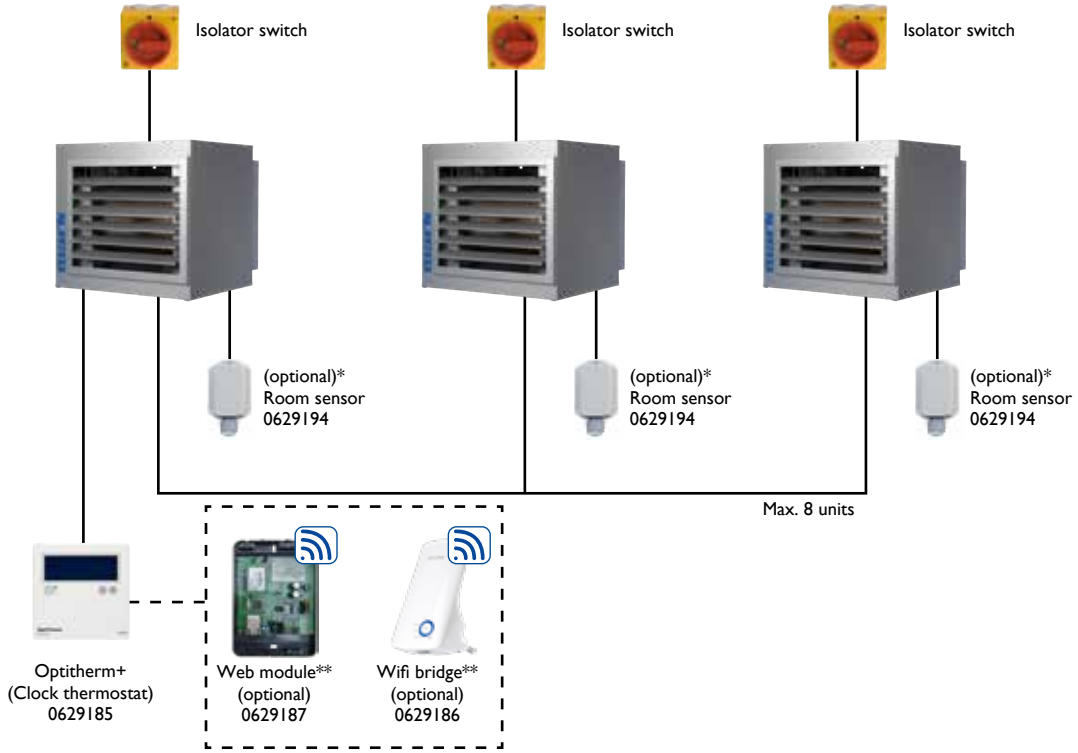

Installation with:
- Optitherm+ in combination with Interface+
- Room temperature control in combination with Modbus. Allows you to read the status and change the settings of the Optitherm+.

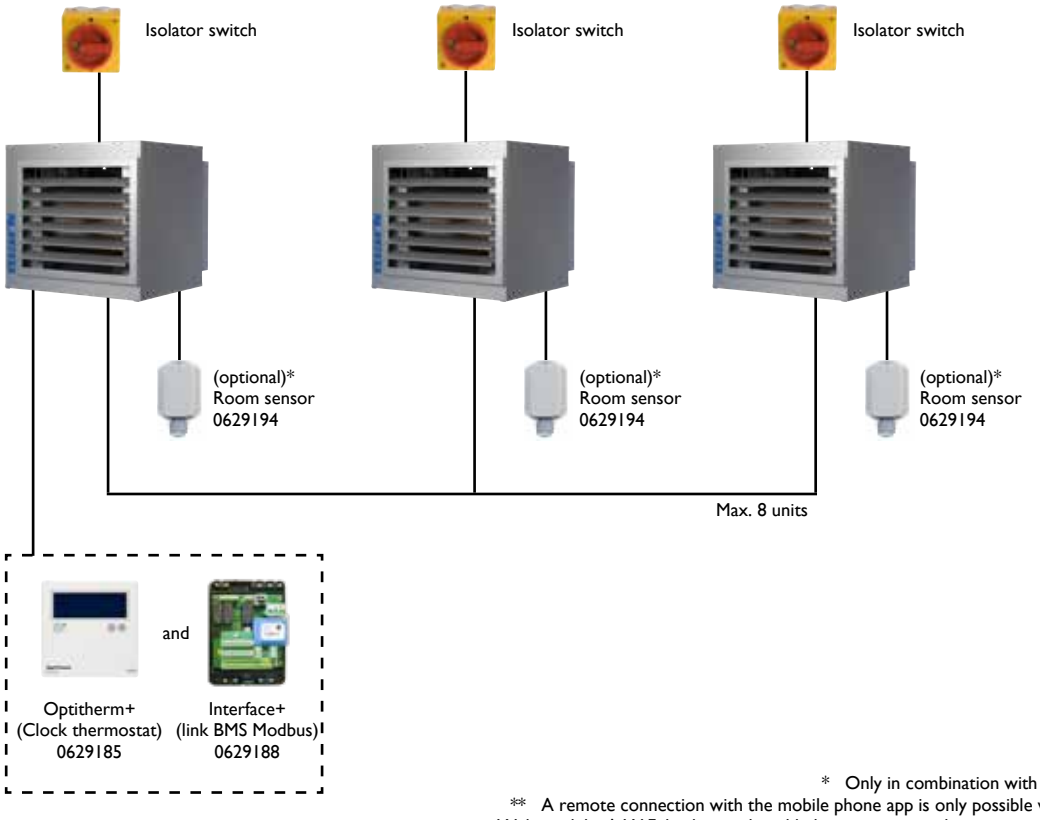

* Only in combination with Optitherm+

** A remote connection with the mobile phone app is only possible when using a Web module. A WiFi bridge can be added to create a wireless connection (available soon). NOTE: The use of a Web module, possibly in combination with a Wifi bridge, is not possible when using an Interface+.

Installation with:
- Interface+
- External signal through potential free contact
- Heating / Continuous ventilation / reset contacts / Modbus reading

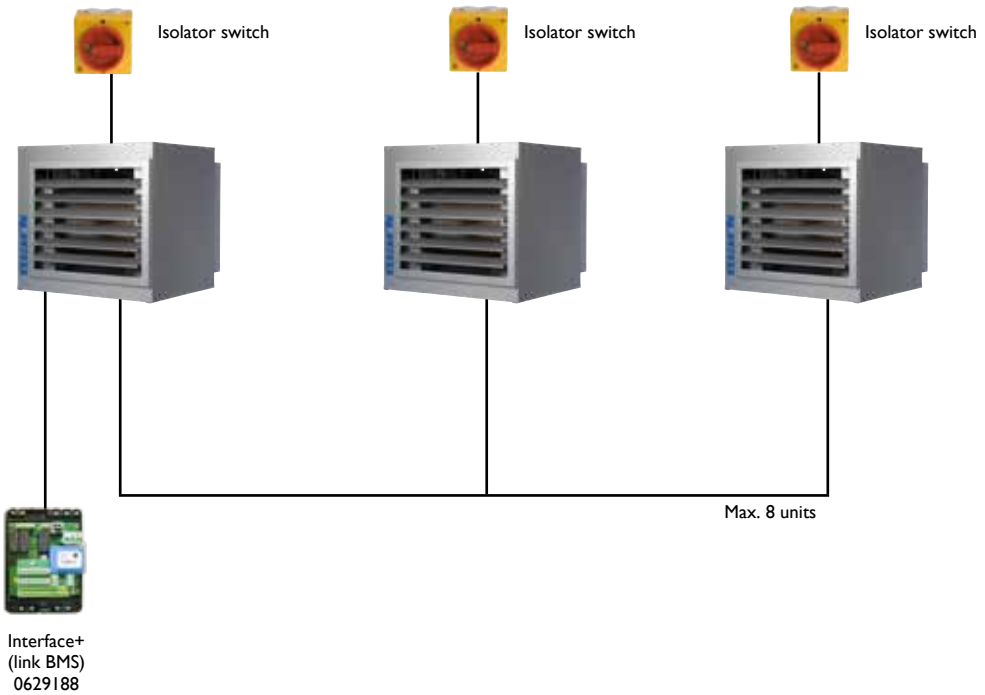

Prices Mark GSX

PRODUCT - GAS-FIRED AIR HEATER GSX - G25 / G20

Code nr.	Description	Price
	GSX 20, gas-fired air heater	€ 2606
	GSX 35, gas-fired air heater	€ 3108
	GSX 55, gas-fired air heater	€ 3758
	GSX 75, gas-fired air heater	€ 4751
	GSX 90, gas-fired air heater	€ 5468

ACCESSORIES - EXHAUST OUTLET

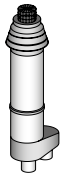

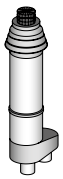

Code nr.	Description	Price
	GSX 20, GSX 35	
5990556	Single flue set vertical aluminium, ø 80mm, external diameter 130mm	€ 161
5990579	Single pipe horizontal aluminium, ø 80mm, external diameter 130mm	€ 104
5990727	Set 2 aluminium pipes, ø 80mm, length 500 mm	€ 60
5990732	Set 2 aluminium pipes, ø 80mm, length 1000 mm	€ 67
5990733	Set smooth aluminium elbows, ø 80mm, 90°	€ 47
5990734	Set smooth aluminium elbows, ø 80mm, 45°	€ 42
0540927	Roof flashing ø 80 mm, only in combination with 5990556	€ 33
3040927	Adhesive coated roof flashing for plastic roofing, only in combination with 5990556	€ 61
0540807	Dektite 4-7", only in combination with 5990556	€ 108
0540804	Roof flashing 20 to 35°, only in combination with 5990556	€ 52
	GSX 55, GSX 75, GSX 90	
5990560	Single flue set vertical aluminium, ø 100mm, external diameter 160mm	€ 290
5990583	Single pipe horizontal aluminium, ø 100mm, external diameter 160mm	€ 199
5990728	Set 2 aluminium pipes, ø 100mm, lengte 500 mm	€ 72
5990736	Set 2 aluminium pipes, ø 100mm, lengte 1000 mm	€ 96
5990737	Set smooth aluminium elbows, ø 100mm, 90°	€ 65
5990738	Set smooth aluminium elbows, ø 100mm, 45°	€ 58
0540929	Roof flashing ø 100 mm, only in combination with 5990560	€ 35
3040929	Adhesive coated roof flashing for plastic roofing, only in combination with 5990560	€ 83
0540807	Dektite 4-7", only in combination with 5990560	€ 108
0540806	Roof flashing 20 to 35°, only in combination with 5990560	€ 80

ACCESSORIES

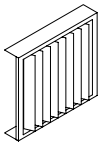

Code nr.	Description	Price
5008533	Vertical louvre GSX 20	€ 117
5008534	Vertical louvre GSX 35	€ 127
5008536	Vertical louvre GSX 55	€ 145
5008538	Vertical louvre GSX 75	€ 181
5008540	Vertical louvre GSX 90	€ 191

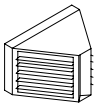

5008554	Diffuser with horizontal louvre GSX 35	€ 397
5008556	Diffuser with horizontal louvre GSX 55	€ 451
5008558	Diffuser with horizontal louvre GSX 75	€ 626
5008560	Diffuser with horizontal louvre GSX 90	€ 825

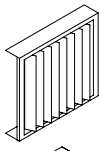

5008574	Vertical louvre for diffuser GSX 35	€ 181
5008576	Vertical louvre for diffuser GSX 55	€ 181
5008578	Vertical louvre for diffuser GSX 75	€ 191
5008580	Vertical louvre for diffuser GSX 90	€ 247

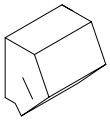

5008544	Downflow hood 45° GSX 35	€ 530
5008546	Downflow hood 45° GSX 55	€ 662
5008548	Downflow hood 45° GSX 75	€ 777
5008550	Downflow hood 45° GSX 90	€ 1006

ACCESSORIES - CONTROL

Code nr.	Description	Price
0629185	Optitherm+ digital clock thermostat	€ 295
0629194	External room temperature sensor	€ 64
0629188	Interface+	€ 249
3000600	Data cable JY(st)Y Dca 1x2x0.8+0.8mm GY (12,5 m)	€ 25
3000601	Data cable JY(st)Y Dca 1x2x0.8+0.8mm GY (25 m)	€ 47
3000602	Data cable JY(st)Y Dca 1x2x0.8+0.8mm GY (100 m)	€ 177
0631162	Isolator switch, separate delivery, 230 Volt (2 poles)	€ 56
5017097	Isolator switch, pre-wired, 230 Volt (2 poles)	€ 90

For function explanation see chapter on control

ACCESSORIES - ASSEMBLY

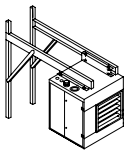

Code nr.	Description	Price
3187220	Set wall mounting brackets (2 pieces), GSX 20	€ 206
5017620	Set wall mounting brackets (2 pieces), GSX 35/55/75/90	€ 241
5017621	Set shock absorbers for wall mounting brackets, GSX 35/55/75/90	€ 105
5017590	Reversible wall brackets GSX 20	€ 301
5017573	Reversible wall brackets GSX 35	€ 301
5017576	Reversible wall brackets GSX 55	€ 301

ACCESSORIES - COLOURS *

Description	Price
GSX provided with colour	€ 255
Accessories provided with colour 1 to 3 pieces (by piece)	€ 125
Accessories provided with colour 4 to 10 pieces (by piece)	€ 110
Accessories provided with colour for more than 10 pieces (by piece)	€ 75

REMARK

CE-approval only applies when the unit is supplied with the corresponding flue gas system.

* These prices are only for the Mark standard RAL-colours: 3002 red, 1028 yellow, 6010 green, 7016 gray, 8014 brown, 9001 beige white, 5009 blue, 2009 orange, 1019 beige

SHOPHEATER

GAS-FIRED AIR HEATER

The compact gas-fired air heater

In addition to the "standard" GSD, Mark also offers a compact gas-fired suspended air heater, the Mark SHOPHEATER AR. With its low height, this air heater is excellently suited to heat low-ceiling rooms. The SHOPHEATER is equipped with an axial fan and a tube heat exchanger as standard.

The air heater is designed for use in showrooms, shops, multi-tenant business buildings and warehouses among other applications.

Features
- Compact construction
- Low weight
- Aluminium pipes exchanger
- Simple assembly and operation
- Painted in colour white RAL
- Low noise

Dimensions

TYPE AR 1.1 H

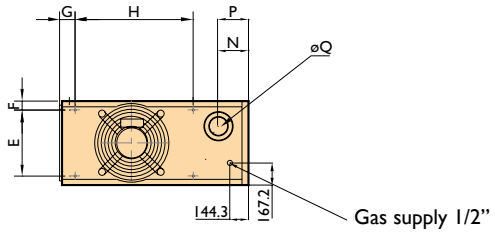

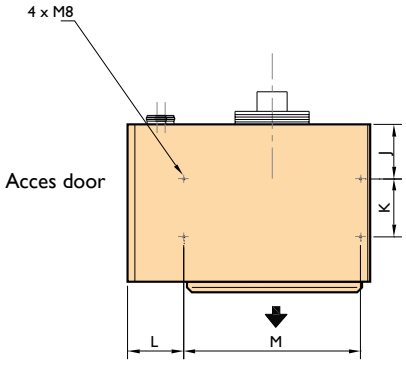

TYPE AR 2.1 H

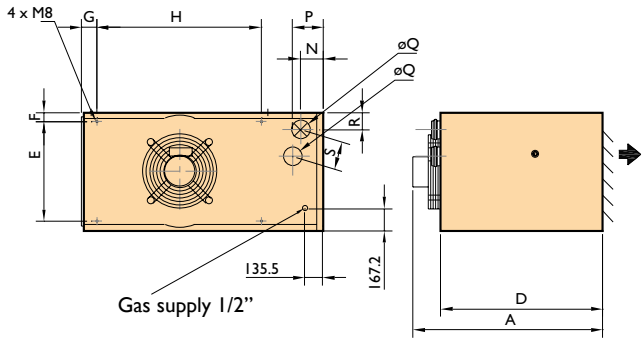

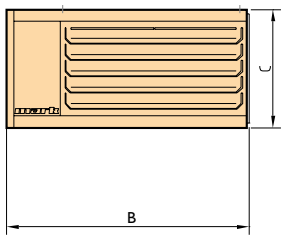

Type	AR 1.1 H	AR 2.1 H
A	780	800
B	810	1040
C	356	460
D	677	677
E	250	380
F	53	40
G	80	100
H	450	677
J	235	235
K	250	250
L	205	225
M	535	765
N	100	85
P	100	113
ØQ	80-125	2x80
R	110	50
S	0	120

Technical information

Type		AR 1.1 H	AR 2.1 H
Nominal load (lower value)	kW	14,2	20
Nominal power	kW	13,1	18,4
Gas consumption G20	kg/h	1,5	2,12
Gas consumption G25	kg/h	1,76	2,35
Gas consumption G31	kg/h	1,11	1,56
Efficiency	%	>91	>91
Air displacement (15°C)	m^3/h	1350	1450
Air displacement (50°C)	m^3/h	1500	1650
Throw	m	12	12
Supply voltage (50Hz)	V	1~230 V	1~230 V
Electrical power	W	290	300
Weight	kg	57	82
Noise level at 5m	dB(A)	45	47

Accessories – flue gas exhaust

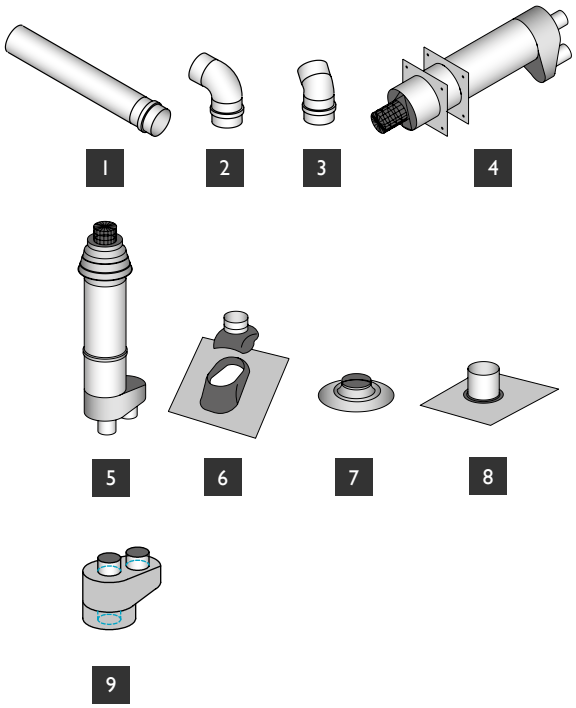

1 Extension set
2 90° elbow
3 45° elbow
4 Single flue set horizontal
5 Single flue set vertical
6 Roof flashing for slanting roof
7 Adhesive plate
8 Flexible roof flashing for sheetpile wall
9 Concentric boot piece for single pipe system
10 Reversible wall bracket

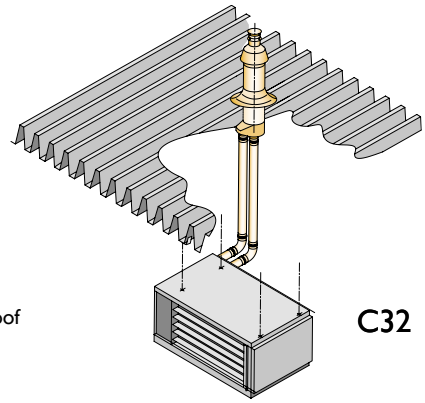

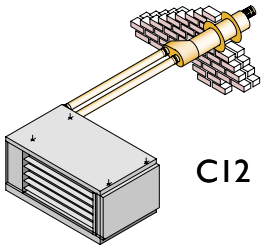

Accessories – additional sections

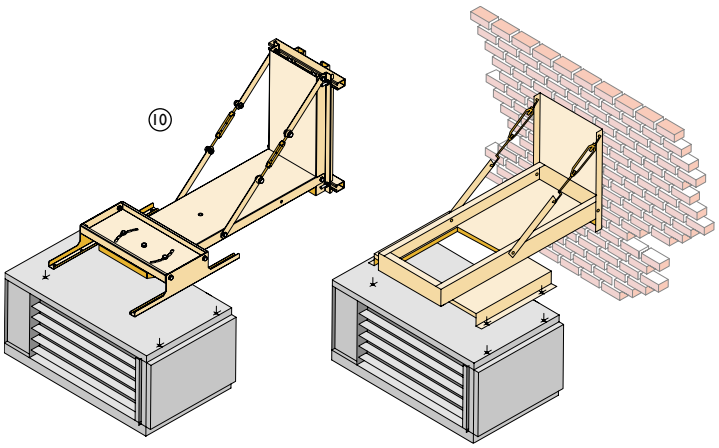

Controls

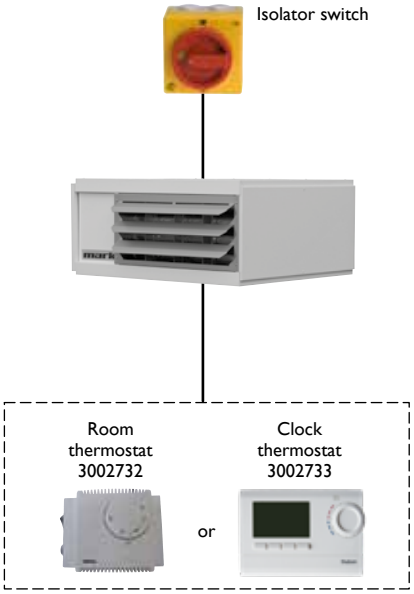
Isolator switch
Room
thermostat
3002732
or
Clock
thermostat
3002733

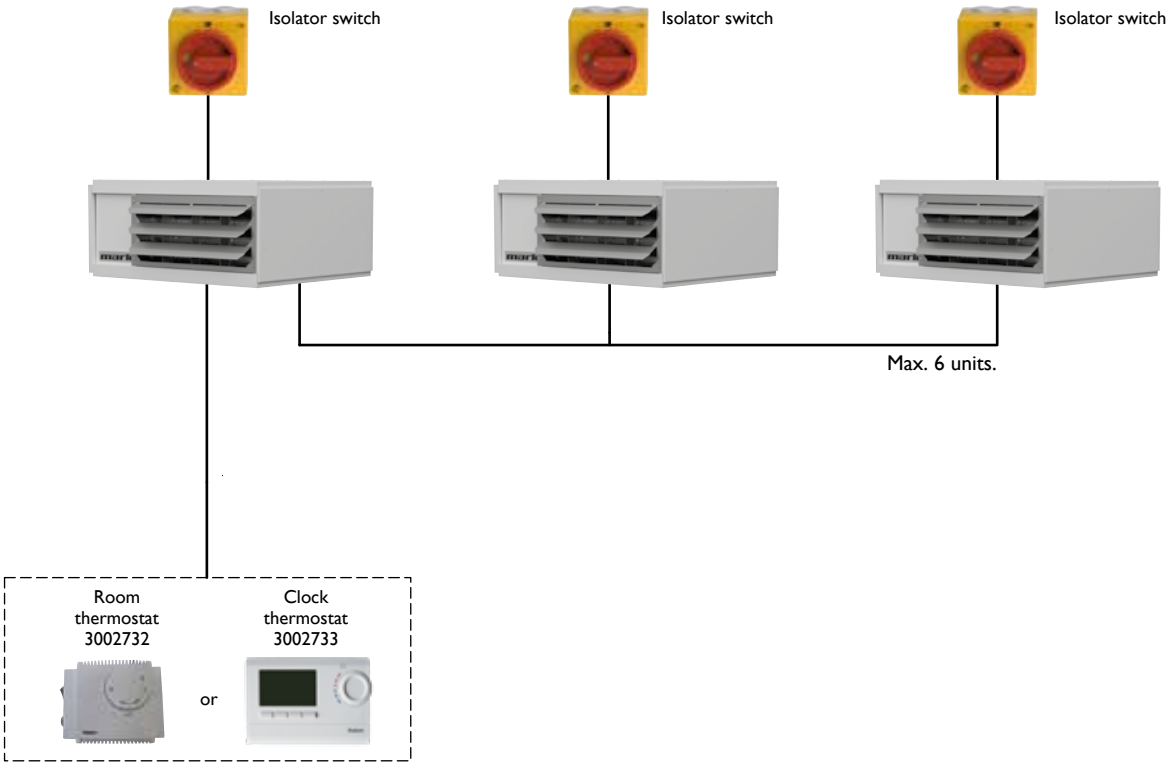
Isolator switch
Isolator switch
Isolator switch
Max. 6 units.
Room
thermostat
3002732
or
Clock
thermostat
3002733

Price Mark SHOPHEATER

PRODUCT - MARK SHOPHEATER - HORIZONTAL - NATURAL GAS G20

Code nr.	Description	Price
	AR 1.1 H, nominal power, 13,1 kW*	€ 2356
	AR 2.1 H, nominal power, 18,4 kW*	€ 2608

* Always order 3002732 / 3002733 to control the Shopheater.

ACCESSORIES - EXHAUST OUTLET

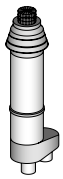

Code nr.	Description	Price
5990556	Single flue set vertical, ø 80 mm. External diameter 130 mm	€ 161
5990579	Single pipe horizontal, ø 80 mm. External diameter 130 mm	€ 104
0540927	Roof flashing, only in combination with 5990556	€ 33
3040927	Adhesive coated roof flashing for plastic roofing, only in combination with 5990556	€ 61
0540804	Roof flashing 20 to 35°, only in combination with 5990556	€ 52
0540807	Dektite 4”-7”, only in combination with 5990556	€ 108
5990732	Set ALU pipes ø 80mm, length 1000 mm	€ 67
5990733	Set ALU elbows 90°, ø 80mm (2 pieces)	€ 47
5990534	Set elbows 45° (3D), ø 80 mm (2 pieces)	€ 37
5017656	Reducer kit (2 x ø 80 - ø 100 / 2x ø 100 - ø 80)	€ 107
0540054	Concentric boot piece for single pipe system ø 80 / 125 _ 2x ø 80	€ 122

ACCESSORIES - CONTROL

Code nr.	Description	Price
3002732	Room thermostat on/off -, I/II- and reset, 230V (4A)	€ 161
3002733	Programmable room thermostat, 230V (4A)	€ 459
0631163	Isolator switch, separate delivery, 230V (4 poles)	€ 64
5017098	Isolator switch, pre-wired, 230V (4 poles)	€ 111

ACCESSORIES - ASSEMBLY

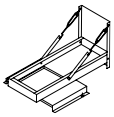

Code nr.	Description	Price
5998050	Set wall mounting brackets, AR 1.1	€ 199
5998051	Set wall mounting brackets, AR 2.1	€ 199
5017577	Reversible wall brackets AR 1.1	€ 301
5017578	Reversible wall brackets AR 2.1	€ 301

ACCESSORIES

Code nr.	Description	Price
5017420	Conversion kit for propane AR 1.1	€ 61
5017421	Conversion kit for propane AR 2.1	€ 80
5017430	Conversion kit for natural gas AR 1.1	€ 61
5017431	Conversion kit for natural gas AR 2.1	€ 80

The longest-running product

One of the first activities of Mark was to build an oil- or gas-fired vertical air heater, the FÖHN.
As a result, Mark has already heated 1,500 churches in the Netherlands alone and may therefore be called the specialist in this field. As well as churches, countless other rooms are heated by the Mark FÖHN. If required, Mark supplies this appliance in loose parts for assembly on site by our own service department. The wide range of capacities from 115 to 400 kW means that this appliance can provide a solution for every heating requirement in any room. The Mark FÖHN is fitted with a centrifugal fan as standard and can therefore be connected to a duct system. Free discharge into a room is just one of the possibilities.

Mark FÖHN features
- Combustion chamber of self-finished steel (stainless steel upon request)
- Heat exchanger of stainless steel
- Supplied with electrical terminal box as standard
- Aluzinc casing
- Burnertype Riello
- Various suction options
- Wide selection of filters
- Fresh air intake possible
- Modulating system fan (option)
- Modulating burner (option)
- Meets the rules of the ErP 2018

Remote connection possible with the PinTherm Connect!

Dimensions

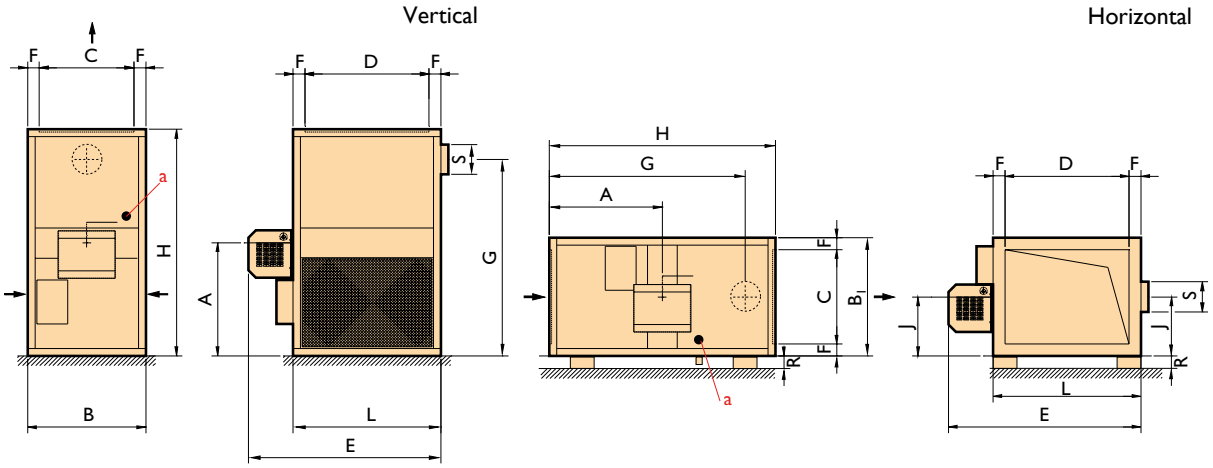

Type	A	B	B1	C	D	E	F	G	H	J	L	R	S
115/160	1150	1200	1200	961	961	1570	119,5	1993	2300	600	1200	100	252
210/270	1150	1200	1200	961	1561	2270	119,5	1993	2300	600	1800	100	302
335	1330	1612	1612	1352	1840	2570	130	2271	2790	806	2100	100	352
400	1330	1612	1612	1352	1840	2570	130	2271	2790	806	2100	100	352

a = Condensation connection 3/4”

Technical information

Type		115	160	210	270	335	400
Nominal load (lower value)	kW	124,8	170,6	223,9	289,7	364,1	420,8
Nominal power	kW	115	155	210	270	347	400
Air displacement with delta T(ΔT) 35K	m^3/h	9611	13372	17551	22566	27998	33431
Air displacement with delta T(ΔT) 40K	m^3/h	8410	11701	15357	19745	24498	29252
Air displacement with delta T(ΔT) 45K	m^3/h	-	-	13651	17551	21776	26001
Gas consumption G25	m^3/h	14,7	20,1	26,4	34,1	42,9	49,6
Gas consumption G20	m^3/h	13,0	17,7	23,3	30,1	37,8	43,7
Gas connection		1 1/4”	1 1/4”	1 1/2”	1 1/2”	2”	2”
Weight	kg	650	780	940	1130	1250	1290
Supply voltage (50Hz)	V	3~400+N	3~400+N	3~400+N	3~400+N	3~400+N	3~400+N

Accessories – additional sections

Horizontal

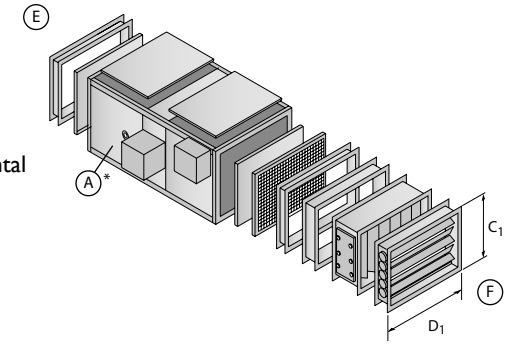

Vertical

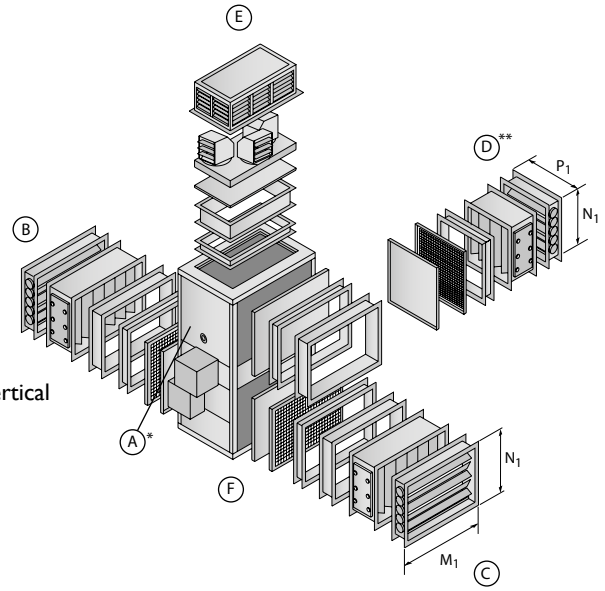

Type	Position A	Position B/C	Position D	Position E/F	Total height including hood
		M_1 x N_1	P_1 x N_1	C_1 x D_1	
115/160	*	1015 x 895	1015 x 895	895 x 895	H + 525
210/270	*	1615 x 895	1015 x 895	895 x 1495	H + 525
335	*	1900 x 956	1412 x 956	1288 x 1774	H + 552
400	*	1900 x 956	1412 x 956	1288 x 1774	H + 552

* No additional parts possible on side **A**.
** For Föhn 210, 270, 335 and 400 blast side **D** always in combination with blast side **B** or **C**.

Assembly/location suggestions

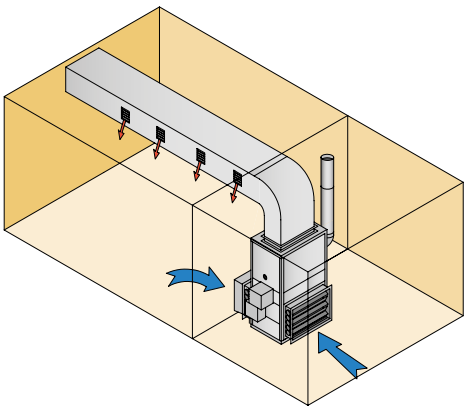

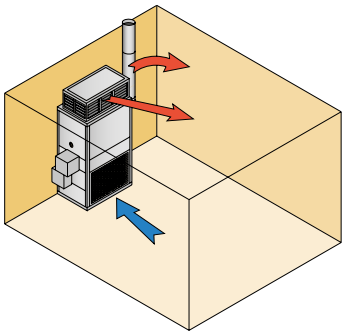

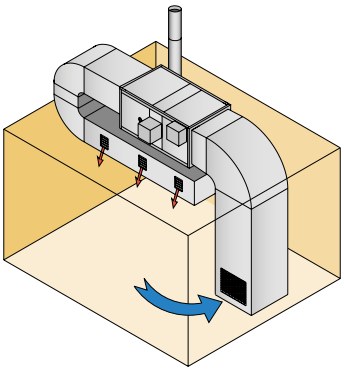

Controls

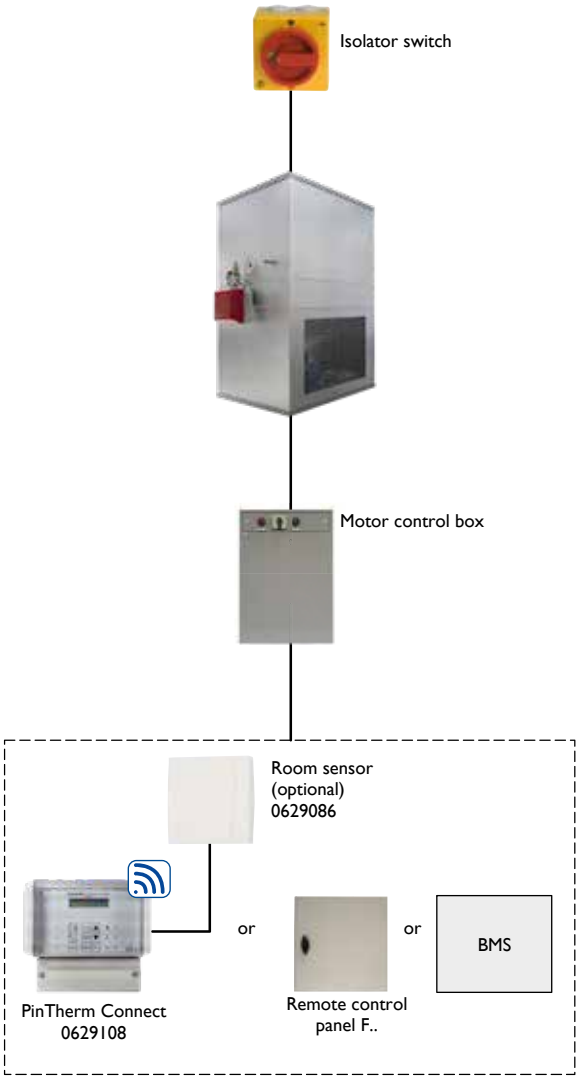
Isolator switch
Motor control box
Room sensor
(optional)
0629086
or
or
BMS
PinTherm Connect
0629108
Remote control
panel F..

Prices Mark FÖHN

PRODUCT - AIR HEATER FÖHN GAS-FIRED WITH RIELLO BURNER - HIGH/LOW

Code nr.	Description	Price
	FÖHN 115, nominal power 119,0 kW	€ 13645
	FÖHN 160, nominal power 166,0 kW	€ 14181
	FÖHN 210, nominal power 218,0 kW	€ 15786
	FÖHN 270, nominal power 280,0 kW	€ 16321
	FÖHN 335, nominal power 347,0 kW	€ 20173
	FÖHN 400, nominal power 415,0 kW	€ 20708

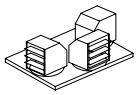

ACCESSORIES

Code nr.	Description	Price
5013204	Hood with horizontal louvre for FÖHN 115 / 160	€ 1054
5013206	Hood with horizontal louvre for FÖHN 210 / 270	€ 1532
5013063	Hood with horizontal louvre for FÖHN 335 / 400	€ 1488

For a good selection of specific projects please contact our sales department

ACCESSORIES - CONTROL

Code nr.	Description	Price
0629013	Room thermostat (4A)	€ 51
0629108	PinTherm Connect - programmable room thermostat with Ethernet and Modbus, 230V (4A)	€ 471
0629086	External temperature sensor, only in combination with 0629108	€ 80
3002615	Remote control panel F4	€ 2276
3002607	Remote control panel F6	€ 2634
3002608	Remote control panel F7	€ 2868

For function explanations see chapter on control.
For a good selection of specific projects please contact our sales department.

ACCESSORIES - OTHER

Code nr.	Description	Price
0601009	Draught stabilator 9” Föhn 115-400	€ 124
5017196	Draught stabilator Föhn 115/160	€ 151
5017197	Draught stabilator Föhn 210/270	€ 161
5017198	Draught stabilator Föhn 335/400	€ 285

REMARKS

From the FÖHN type 270 the burner will always start in stand low.

If the heater is ordered without an hood, the static pressure will be 100 Pa.

G-TYPE

GAS-FIRED AIR HEATER

A wide variety of uses

The G-TYPE is a vertical or horizontal oil or gas-fired air heater with a capacity of 570 kW to 1050 kW. The appliance can both flow down freely into the room and can be connected to a conduit system. The Mark G-TYPE can be installed in stoke-rooms. Almost all brands and types of burner can be used in the Mark G-TYPE. The G-TYPE is therefore versatile.

Fan
– A dual blast centrifugal ventilator with bent blades
– Vee-belt drive

Housing
– Pre-painted steel plating.
– Frame: aluminium profiles.

Standard equipment
– AISI 430 blast chamber
– AISI 409 heat exchanger
– Electrical switch box
– Three-way thermostat
– Motor cut-out

Accessories/options
– Various burners
– Room thermostat
– Remote control
– Gas density control
– Flue gas fan
– Working hours counter
– Stainless steel heat exchanger
– Outside installation

Sections enclosed
– Connection
– Grid
– Empty section
– Filter section with differential pressure switch
– Servo or manually-operated slatted valves
– Weather grill
– Flexible connection
– Adjustable down flow hood

Adjustments:
– On/off
– High/low
– Modulating

The Mark G-TYPE can be used in the following rooms: sports halls, churches, offices and shops.

Remote connection possible with the PinTherm Connect!

mark®

Dimensions

Type		G500	G600	G750	G900
Dimensions	A	2300	2820	2820	3720
	B	1340	1550	1620	1620
	C	2660	2960	3100	3100
Flue position	E +/-	2280	2572	2672	2672
	ø	306	356	406	406
Air out	F	1260	1470	1540	1540
	G	2220	2740	2740	3640
Air intake	H	930	970	970	970
	I	2220	2740	2740	3640
Burner	J	1345	1530	1530	1530

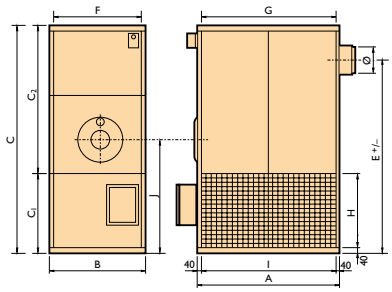

Type	G600	G750	G900
C1	1050	1050	1050
C2	1910	2050	2050

Technical information

Type		G500	G600	G750	G900
Nominal load (lower value)	kW	632,3	763,4	957,3	1136,0
Nominal power	kW	569,8	697,7	872,1	1047,0
Air displacement with ΔT 45K	m^3/h 18 °C	38700	46500	55200	69500
Electrical connection (50Hz)	V	3~400+N	3~400+N	3~400+N	3~400+N
Gas consumption G20	m^3/h	67,0	80,8	101,4	120,3
Gas consumption G25	m^3/h	77,8	94,0	117,8	140,0
Gas consumption G31	kg/h	48,2	58,1	72,9	86,5
Gas consumption G30	kg/h	49,0	59,1	74,1	88,0
Oil consumption	kg/h	53,3	64,4	80,7	95,8
Noise level (4m)	dB(A)	76	75	76	78
Weight	kg	1550	1850	2300	2800

Assembly/location suggestions

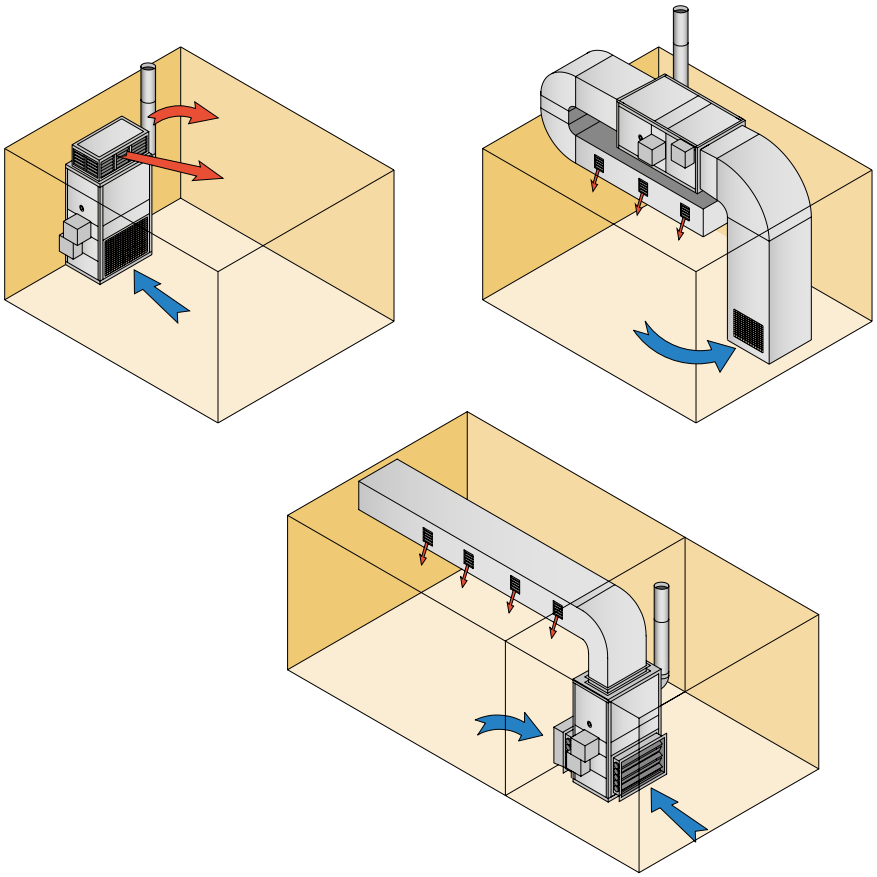

Controls

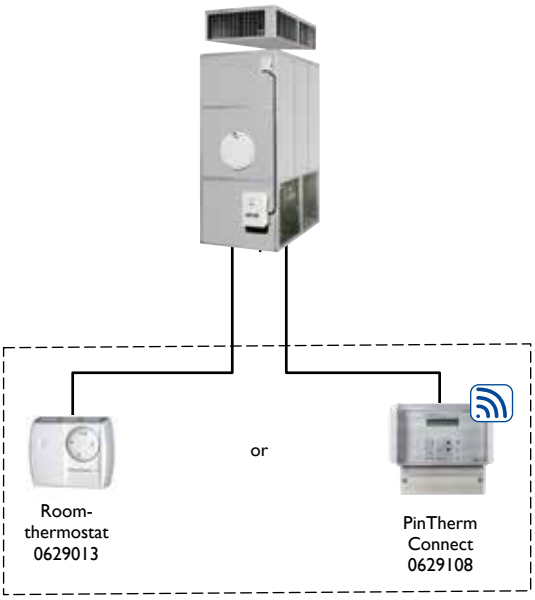

Prices Mark G-TYPE

PRODUCT - VERTICAL CABINET HEATER G-TYPE, WITHOUT BURNER EXCL. HOOD - G20

Code nr.	Description	Price
5994114	G 500 Vertical cabinet heater G-TYPE, 570 kW	€ 17850
5994115	G 600 Vertical cabinet heater G-TYPE, 700 kW*	€ 22574
5994116	G 750 Vertical cabinet heater G-TYPE, 875 kW*	€ 24733
5994117	G 900 Vertical cabinet heater G-TYPE, 1050 kW*	€ 32246

PRODUCT - HORIZONTAL CABINET HEATER G-TYPE, WITHOUT BURNER

Code nr.	Description	Price
5994134	G 500 Horizontal cabinet heater G-TYPE, 570 kW	€ 19454
5994135	G 600 Horizontal cabinet heater G-TYPE, 700 kW*	€ 24983
5994136	G 750 Horizontal cabinet heater G-TYPE, 875 kW*	€ 27361
5994137	G 900 Horizontal cabinet heater G-TYPE, 1050 kW*	€ 35679

ACCESSORIES - PLENUM

Code nr.	Description	Price
5994215	Plenum + Louvres G 500	€ 2008
5994217	Plenum + Louvres G 600	€ 2561
5994219	Plenum + Louvres G 750	€ 2999
5994220	Plenum + Louvres G 900	€ 3332

For a good selection of specific projects please contact our sales department.

ACCESSORIES - CONTROL

Code nr.	Description	Price
0629013	Room thermostat (4A)	€ 51
0629108	PinTherm Connect - programmable room thermostat with Ethernet and Modbus, 230V (4A) For function explanation see chapter on control.	€ 471

REMARK

* Delivered in 2 pieces

TANNER MDE

ELECTRIC AIR HEATER

Electric air heater for effective heating

The TANNER MDE is a suspended electric air heater for permanent use. The unit is equipped with horizontally adjustable discharge blades and can be mounted with the optional wall bracket. The unit has a powerful axial fan, which means that the unit has many applications.

The TANNER MDE is designed for use in showrooms, changing rooms, corporate hallways, ships and garages.

The TANNER MDE can be operated with an external selector switch. The switch has the following positions:
- Ventilation
- Heating high
- Heating low

The unit is equipped with a thermostat connection.

Characteristics:
- Aluzinc housing
- 400V version
- IP 00
- Long lifetime
- Low noise level
- Integrated electronic thermal protection
- Post-running thermostat for efficient cooling.

Remote connection possible with the PinTherm Infra Connect!

mark®

Dimensions

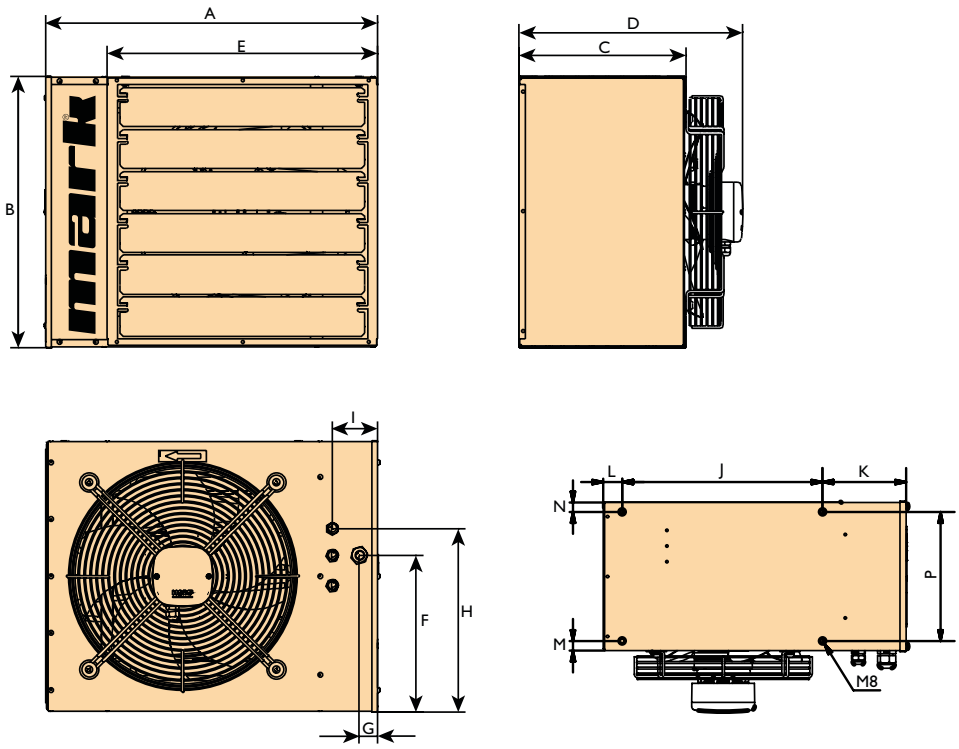

Type	A	B	C	D	E	F	G	H	I	J	K	L	M	N	O	P
6	480	380	240	330	380	190	30	235	75	318	133	30	15	15	318	205
9	480	380	240	330	380	190	30	235	75	318	133	30	15	15	318	205
12	550	450	280	370	450	260	30	305	75	390	133	30	35	35	390	205
15	550	450	280	370	450	260	30	305	75	390	133	30	35	35	390	205
24	660	570	300	440	550	290	30	330	75	390	195	78	45	45	390	205
30	660	570	300	440	550	290	30	330	75	390	195	78	45	45	390	205
42	660	570	300	440	550	290	40	330	85	390	195	78	45	45	390	205
51	830	730	350	490	715	450	40	530	85	665	136	29	32	37	665	281

Technical information

Type		6	9	12	15	24	30	42	51
Nominal power	kW	6	9	12	15	24	30	42	51
Power steps	kW	3+3	4,5+4,5	6+6	9+6	12+12	15+15	24+18	24+27
Supply voltage (50Hz)	V	3x400V+N+PE	3x400V+N+PE	3x400V+N+PE	3x400V+N+PE	3x400V+N+PE	3x400V+N+PE	3x400V+N+PE	3x400V+N+PE
Consumed current	A	8,7	13,0	17,3	21,7	34,7	43,4	60,7	73,7
Air displacement	m^3/h	800	800	1600	1600	2800	2800	4450	6495
Speed	rpm	1400	1400	1000	1000	1000	1000	1400	1000
Delta T (ΔT)	K	22,5	33,8	22,6	28,2	25,7	32,1	28,3	23,6
Weight	kg	13	14	19	20	30	32	36	53
Noise at 5 m	dB(A)	38	38	48	48	50	50	50	52
Throw	m	8	8	12	12	17	17	20	25
Protection class	IP	00	00	00	00	00	00	00	00

Assembly/location suggestions

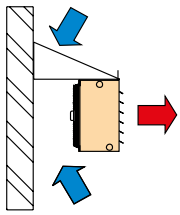

Controls

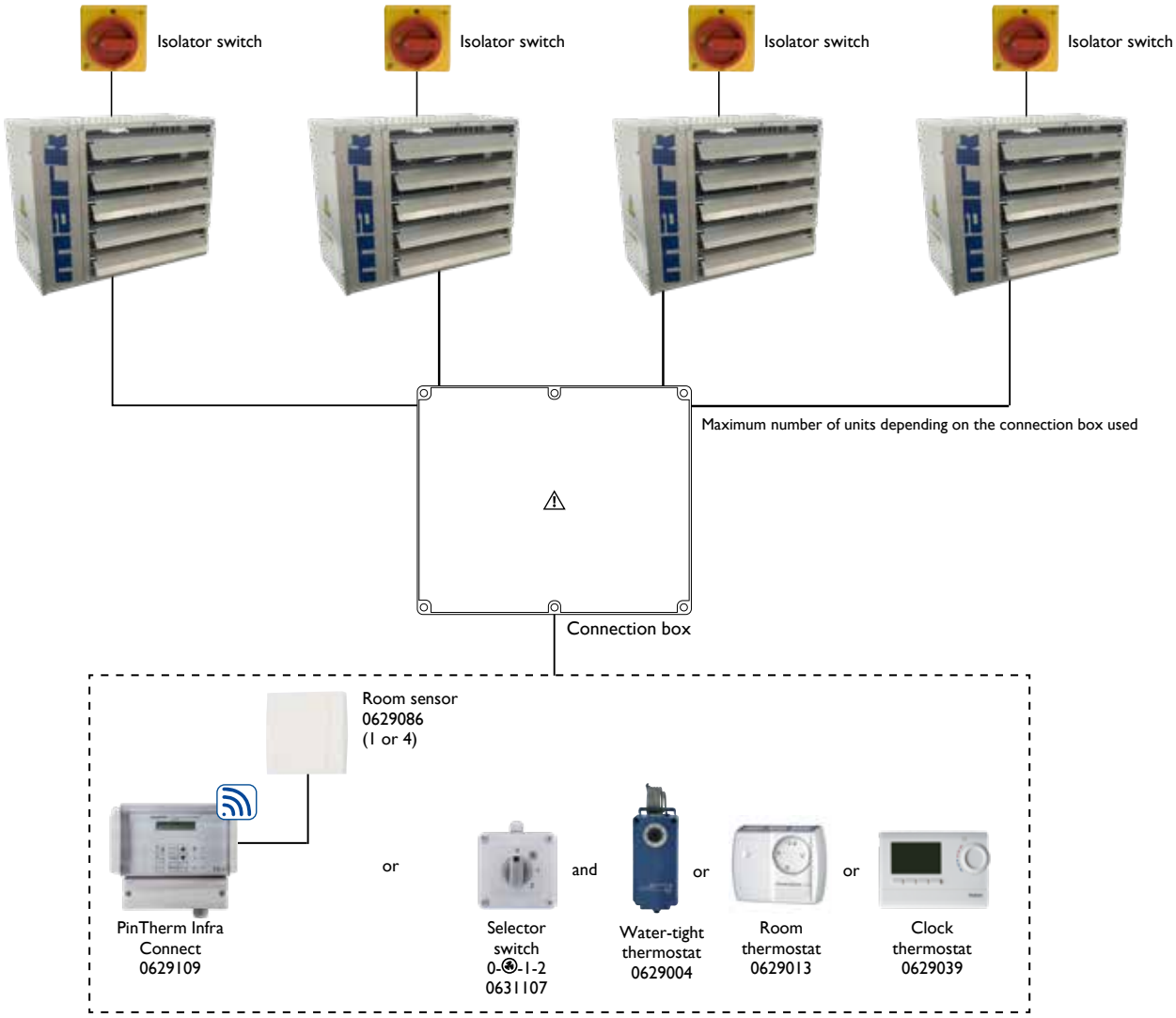

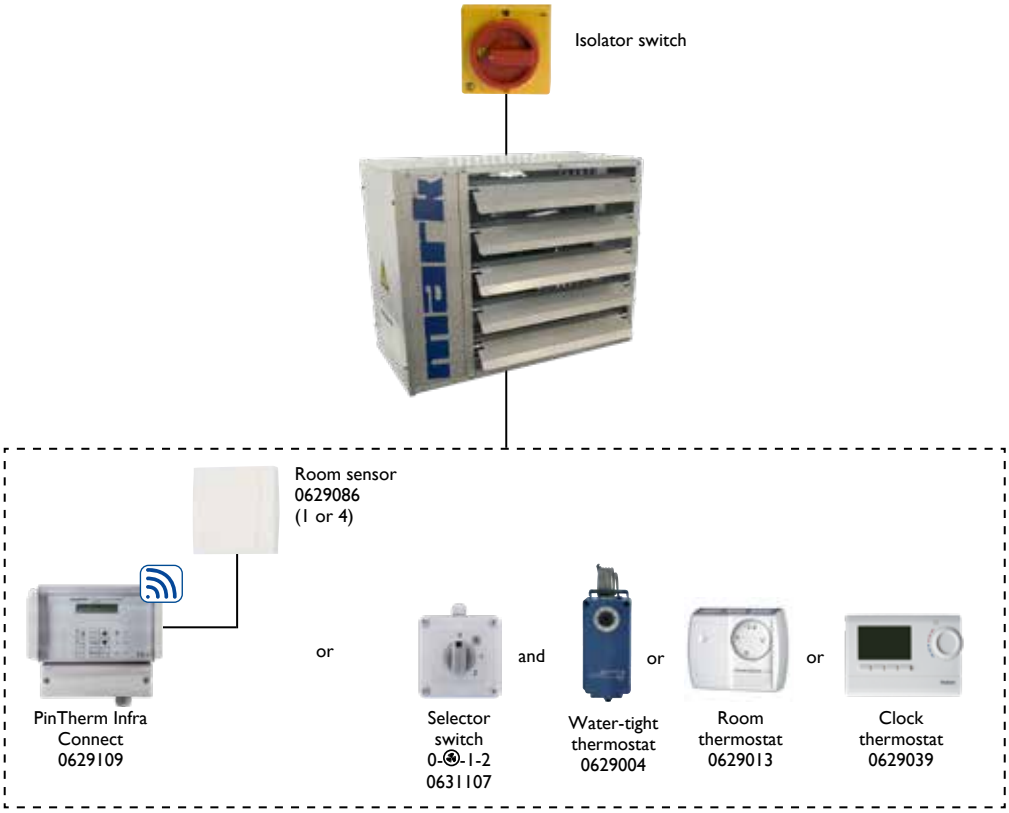

Prices Mark TANNER MDE

PRODUCT - ELECTRICAL AIR HEATER TANNER MDE, 400V

Code nr.	Description	Price
5017002	Tanner MDE 6 electrical air heater, 3-phase 400V / 50Hz	€ 968
5017003	Tanner MDE 9 electrical air heater, 3-phase 400V / 50Hz	€ 1066
5017004	Tanner MDE 12 electrical air heater, 3-phase 400V / 50Hz	€ 1283
5017005	Tanner MDE 15 electrical air heater, 3-phase 400V / 50Hz	€ 1433
5017008	Tanner MDE 24 electrical air heater, 3-phase 400V / 50Hz	€ 1708
5017010	Tanner MDE 30 electrical air heater, 3-phase 400V / 50Hz	€ 1822
5017014	Tanner MDE 42 electrical air heater, 3-phase 400V / 50Hz	€ 1987
5017017	Tanner MDE 51 electrical air heater, 3-phase 400V / 50Hz	€ 2422

ACCESSORIES - ASSEMBLY

Code nr.	Description	Price
5064047	Set wall brackets for horizontal air flow	€ 58

ACCESSORIES - CONTROL

Code nr.	Description	Price
0629004	Water resistant room thermostat, 230V, IP65	€ 224
0629013	Room thermostat 230V, (4A)	€ 51
0629039	Clock thermostat (1A)	€ 350
0629109	PinTherm Infra Connect – programmable thermostat with Ethernet and Modbus, 230V (4A)	€ 459
0629086	Room sensor only in combination with 0629109	€ 80
0631107	Selector switch 0-⊛-1-2	€ 66
0631147	Isolator switch 16A black	€ 39
0631148	Isolator switch 32A black	€ 51
0631149	Isolator switch 63A black	€ 83
0631144	Isolator switch 80A black	€ 481
3004475	Connection box for max. 4x Tanner MDE and selector switch and room thermostat	€ 543
3004476	Connection box for max. 4x Tanner MDE and PinTherm Infra Connect	€ 523
3004477	Connection box for max. 8x Tanner MDE and selector switch and room thermostat	€ 747
3004478	Connection box for max. 8x Tanner MDE and PinTherm Infra Connect	€ 710

Pintherm Infra Connect or selector switch and room thermostat order separately

For function explanation see chapter on control

TANNER MDA

WATER-SUPPLIED AIR HEATER

The most versatile hot water air heater on the market

The TANNER MDA is a water-supplied suspended air heater which can expel air horizontally or vertically. The unit has a powerful axial fan which means it is suitable for many applications. Mark offers a highly extensive range of accessories for the TANNER MDA allowing it to be aligned to all applications. For example, the unit can be made suitable for external air connection in combination with filtering and a mixing box for the destratification of fresh external air. The unit is also available as an ATEX / EEX-model. (400V) - IP 44 (EX II 2 G EEX e II T3).

The TANNER MDA is designed for use in showrooms, changing rooms, corporate hallways and garages.

Features:
- Manufactured with a corrosion-resistant aluzinc housing as standard
- Copper/aluminium heat exchanger
- Highly versatile due to extensive configuration options
- Available as 230V or 400V
- IP class 54

There is also a TANNER MDA+ with integrated drip tray available that is suitable for both heating and cooling

Optional: speed controlled low noise EC-motor (230V/0-10V). Advantages:
- The highest efficiency in case of speed control
- Up to 50% energy saving in case of partial load
- Almost completely linearly adjustable
- Long lifetime
- Low noise level
- Integrated electronic thermal protection

Remote connection possible with the PinTherm Connect!

Dimensions

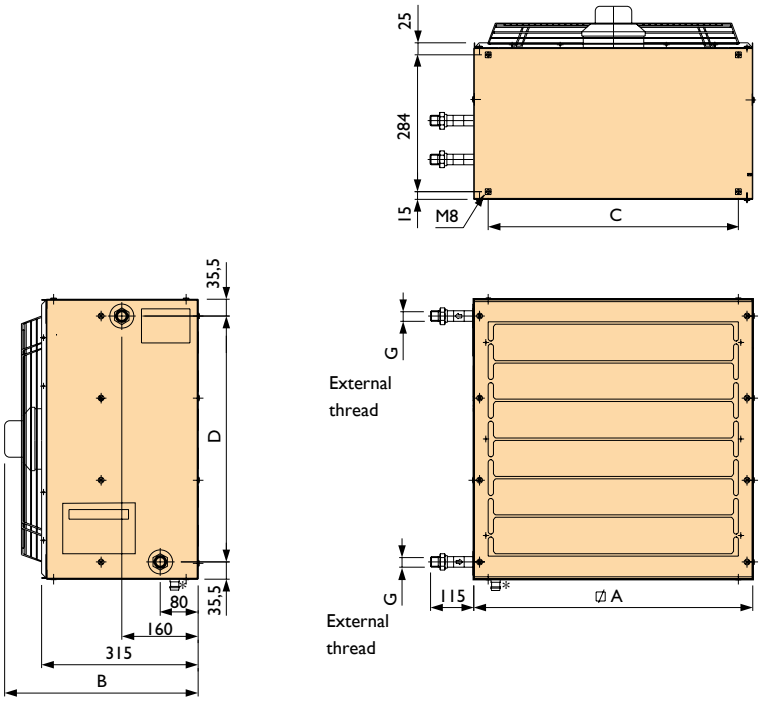

Type	A	B	C	D	G 1R	2R	3R	4R
100	450	380	387	379	1”	1”	1”	1”
200	580	385	517	509	1”	1”	1”	1”
300	730	385	667	659	1”	1”	1 1/4”	1 1/4”
400	860	405	797	789	1”	1 1/4”	1 1/2”	1 1/2”

* Condensate connection ø 20 mm. Only for Tanner MDA+ for heating/cooling.

Technical information

TYPE DESIGNATION

MDA [+] [1] [2] [3] [H]

... only heating
+ heating or cooling

Size: 100, 200, 300, 400

Heat exchanger: number of rows: 2, 3, 4

3: Motor 2-speed: 3~400V / 50Hz
1: Motor 1~230V / 50Hz

type: 100 + 200: 1400 min^{-1}
type: 300 + 400: 1000 min^{-1}

H: high, 1400/1000 or 1400 min^{-1}
L: low, 1000/700 or 1000 min^{-1}
EC: EC Fan

MDA low-speed - 1 phase 230V

	Type		121L	131L	141L	221L	231L	241L	321L*	331L*	341L*	421L*	431L*	441L*
heating	90/70 T 15	kW	14,5	17,0	19,0	25,1	30,8	33,3	52,7	65,9	72,1	80,0	101,0	110,0
	Water resistance T15	kPa	4	8	12	7	4	8	8	4	12	8	6	18
	Outlet temperature at the heat exchanger	°C	41,7	49,4	59,2	42,7	53,0	58,8	38,8	48,0	54,0	38,6	48,6	54,1
	80/60 T 15	kW	11,9	14,1	15,9	20,6	25,4	27,8	43,3	54,1	60,2	65,7	83,1	91,6
	Outlet temperature at the heat exchanger	°C	36,8	43,6	52,0	37,8	46,3	51,6	34,6	42,1	47,6	34,4	42,7	47,7
	60/40 T 15	kW	6,6	8,3	9,6	11,7	14,4	16,7	24,4	30,2	35,8	36,9	47,2	55,1
	Outlet temperature at the heat exchanger	°C	27,1	31,7	37,3	27,9	32,8	36,9	26,0	30,1	34,4	25,9	30,7	34,7
cooling	7/12 T 28 °C [RH50%] **	kW	3,6	4,37	6,15	6,32	7,71	10,4	13,3	16,4	22,3	20,1	25,4	35,4
	Blow-out temperature **	°C	21,1	18,8	17,2	20,7	18,1	17,2	21,8	19,5	18,2	21,8	19,2	18,3
	Water resistance T28 **	kPa	6	12	24	8	5	14	11	7	22	10	8	38
	Speed	rpm	900	900	900	830	830	830	845	845	845	925	925	925
	Air displacement	m³/h	1595	1446	1265	2656	2381	2233	6495	5857	5423	9933	8816	8217
	Noise at 5 m	dB(A)	49	49	49	49	48	48	52	53	53	61	59	58
	Weight without accessories	kg	22	23	24	32	34	36	43	46	49	55	59	63
	Horizontal throw	m	12	10	8	17	15	12	25	22	19	35	31	27
	Vertical throw	m	4	4	3,5	4,8	4,5	4	8,1	6,8	5,9	7,4	6,2	5,5
	Consumed current (AC fan)	A	0,35	0,35	0,35	0,49	0,49	0,49	1,5	1,5	1,5	1,8	1,8	1,8
	Consumed current (EC fan)	A	-	-	-	-	-	-	1,65	1,65	1,65	2,7	2,7	2,7
	Nominal electric power (AC fan)	kW	0,077	0,077	0,077	0,113	0,113	0,113	0,33	0,33	0,33	0,4	0,4	0,4
	Nominal electric power (EC fan)	kW	-	-	-	-	-	-	0,24	0,24	0,24	0,62	0,62	0,62

MDA high-speed - 1 phase 230V

	Type		121H*	131H*	141H*	221H*	231H*	241H*
heating	90/70 T 15	kW	18,0	22,1	25,1	32,4	42,0	46,6
	Water resistance T15	kPa	7	13	20	9	5	13
	Outlet temperature at the heat exchanger	°C	37,4	43,9	53,4	37,6	46,4	51,6
	80/60 T 15	kW	14,7	18,3	20,9	26,6	34,5	38,7
	Outlet temperature at the heat exchanger	°C	33,3	38,9	47,1	33,6	40,8	45,5
	60/40 T 15	kW	8,1	10,6	12,5	14,9	19,3	22,9
	Outlet temperature at the heat exchanger	°C	25,0	28,8	34,2	25,4	29,4	33,0
cooling	7/12 T 28 °C [RH50%] **	kW	4,46	5,67	7,88	8,14	10,5	14,1
	Blow-out temperature **	°C	22,2	20,3	18,3	22,1	19,9	16,9
	Water resistance T28 **	kPa	10	16	37	12	7	25
	Speed	rpm	1400	1400	1400	1400	1400	1400
	Air displacement	m³/h	2365	2244	1914	4202	3932	3734
	Noise at 5 m	dB(A)	54	55	55	57	53	53
	Weight without accessories	kg	22	23	24	32	34	34
	Horizontal throw	m	15	13	11	20	19	17
	Vertical throw	m	6,9	6,8	6,3	7,7	7,6	7,2
	Consumed current (AC fan)	A	0,6	0,6	0,6	1,15	1,15	1,15
	Consumed current (EC fan)	A	0,98	0,98	0,98	2,2	2,2	2,2
	Nominal electric power (AC fan)	kW	0,13	0,13	0,13	0,23	0,23	0,23
	Nominal electric power (EC fan)	kW	0,125	0,125	0,125	0,32	0,32	0,32

* Available with speed controlled EC-motor.
** Only for Tanner MDA+ for heating/cooling.

MDA low-speed - 3 phase 400V

	Type		123L	133L	143L	223L	233L	243L	323L	333L	343L	423L	433L	443L
heating	90/70 T 15	kW	14,5	17,0	19,0	26,2	32,4	35,1	52,7	65,9	72,1	84,0	107,0	117,0
	Water resistance T15	kPa	4	8	12	6	4	9	8	4	12	9	7	21
	Outlet temperature at the heat exchanger	°C	41,7	49,4	59,2	41,9	52,0	57,7	38,8	48,0	54,0	37,7	47,3	52,7
	80/60 T 15	kW	11,9	14,1	15,9	21,6	26,7	29,3	43,3	54,1	60,2	68,9	88,1	97,4
	Outlet temperature at the heat exchanger	°C	36,8	43,6	52,0	37,1	45,4	50,6	34,6	42,1	47,6	33,6	41,6	46,5
	60/40 T 15	kW	6,6	8,3	9,6	12,2	15,1	17,5	24,4	30,2	35,8	38,7	49,9	58,5
	Outlet temperature at the heat exchanger	°C	27,1	31,7	37,3	27,5	32,2	33,3	26,0	30,1	34,4	25,4	30,1	34,0
cooling	7/12 T 28 °C [RH50%] **	kW	3,6	4,37	6,15	6,6	8,1	10,9	13,3	16,4	22,3	21,1	26,9	37,5
	Blow-out temperature **	°C	21,1	18,8	17,2	21	18,4	17,6	21,8	19,5	18,2	22,1	19,6	18,4
	Water resistance T28 **	kPa	6	12	24	8	6	16	11	7	22	11	9	42
	Speed	rpm	1000	1000	1000	1000	1000	1000	910	910	910	870	870	870
	Air displacement	m^3/h	1595	1446	1265	2865	2574	2414	6495	5857	5423	10868	9735	9064
	Noise at 5 m	dB(A)	48	49	49	49	48	48	52	53	53	61	59	59
	Weight without accessories	kg	22	23	24	32	34	36	43	46	46	52	61	64
	Horizontal throw	m	12	10	8	17	15	13	25	22	19	35	31	28
	Vertical throw	m	4	4	3,5	5,9	4,5	4	8,1	6,8	5,9	8,5	6,9	5,8
	Consumed current	A	0,1	0,1	0,1	0,3	0,3	0,3	0,85	0,85	0,85	1,25	1,25	1,25
	Nominal electric power	kW	0,05	0,05	0,05	0,12	0,12	0,12	0,38	0,38	0,38	0,6	0,6	0,6

MDA high-speed - 3 phase 400V

	Type		123H	133H	143H	223H	233H	243H
heating	90/70 T 15	kW	18,0	22,1	25,1	32,4	42,0	46,6
	Water resistance T15	kPa	7	13	20	9	5	13
	Outlet temperature at the heat exchanger	°C	37,4	43,9	53,4	37,6	46,4	51,6
	80/60 T 15	kW	14,7	18,3	20,9	26,6	34,5	38,7
	Outlet temperature at the heat exchanger	°C	33,3	38,9	47,1	33,6	40,8	45,5
	60/40 T 15	kW	8,1	10,6	12,5	14,9	19,3	22,9
	Outlet temperature at the heat exchanger	°C	25,0	28,8	34,2	25,4	29,4	33,0
cooling	7/12 T 28 °C [RH50%] **	kW	4,46	5,67	7,88	8,14	10,5	14,1
	Blow-out temperature **	°C	22,2	20,3	18,3	22,1	19,9	16,9
	Water resistance T28 **	kPa	10	16	37	12	7	25
	Speed	rpm	1330	1330	1330	1350	1350	1350
	Air displacement	m^3/h	2365	2244	1914	4202	3932	3734
	Noise at 5 m	dB(A)	54	55	55	57	53	53
	Weight without accessories	kg	22	23	24	32	34	36
	Horizontal throw	m	15	13	11	20	19	17
	Vertical throw	m	6,9	6,8	6,3	7,7	7,6	7,2
	Consumed current	A	0,36	0,36	0,36	0,51	0,51	0,51
	Nominal electric power	kW	0,16	0,16	0,16	0,216	0,216	0,216

** Only for Tanner MDA+ for heating/cooling.

Capacity calculation for other water temperatures

ΔT1	ΔT2															
	20	25	30	35	40	45	50	55	60	65	70	75	80	85	90	95
10	0.26	0.35	0.44	0.53	0.62	0.71	0.80	0.89	1.04	1.14	1.23	1.34	1.44	1.54	1.64	1.74
15	0,22	0,31	0,39	0,49	0,58	0,67	0,77	0,85	0,96	1,06	1,17	1,26	1,36	1,46	1,56	1,66
20	0.18	0.27	0.36	0.46	0.55	0.64	0.74	0.82	0.92	1.00	1.10	1.20	1.29	1.40	1.50	1.61
30	0.11	0.21	0.30	0.39	0.48	0.57	0.66	0.77	0.86	0.95	1.05	1.15	1.25	1.36	1.48	X
40	X	0.11	0.21	0.32	0.43	0.52	0.62	0.71	0.80	0.90	1.00	1.10	1.20	1.30	X	X
50	X	X	0.12	0.22	0.32	0.45	0.55	0.64	0.74	0.83	0.93	1.03	1.14	X	X	X
60	X	X	X	0.15	0.26	0.36	0.46	0.56	0.66	0.76	0.86	0.96	X	X	X	X

ΔT1= Temperature difference hot water inlet minus outlet ΔT2= Average water temperature minus air inlet temperature

Accessories – additional sections

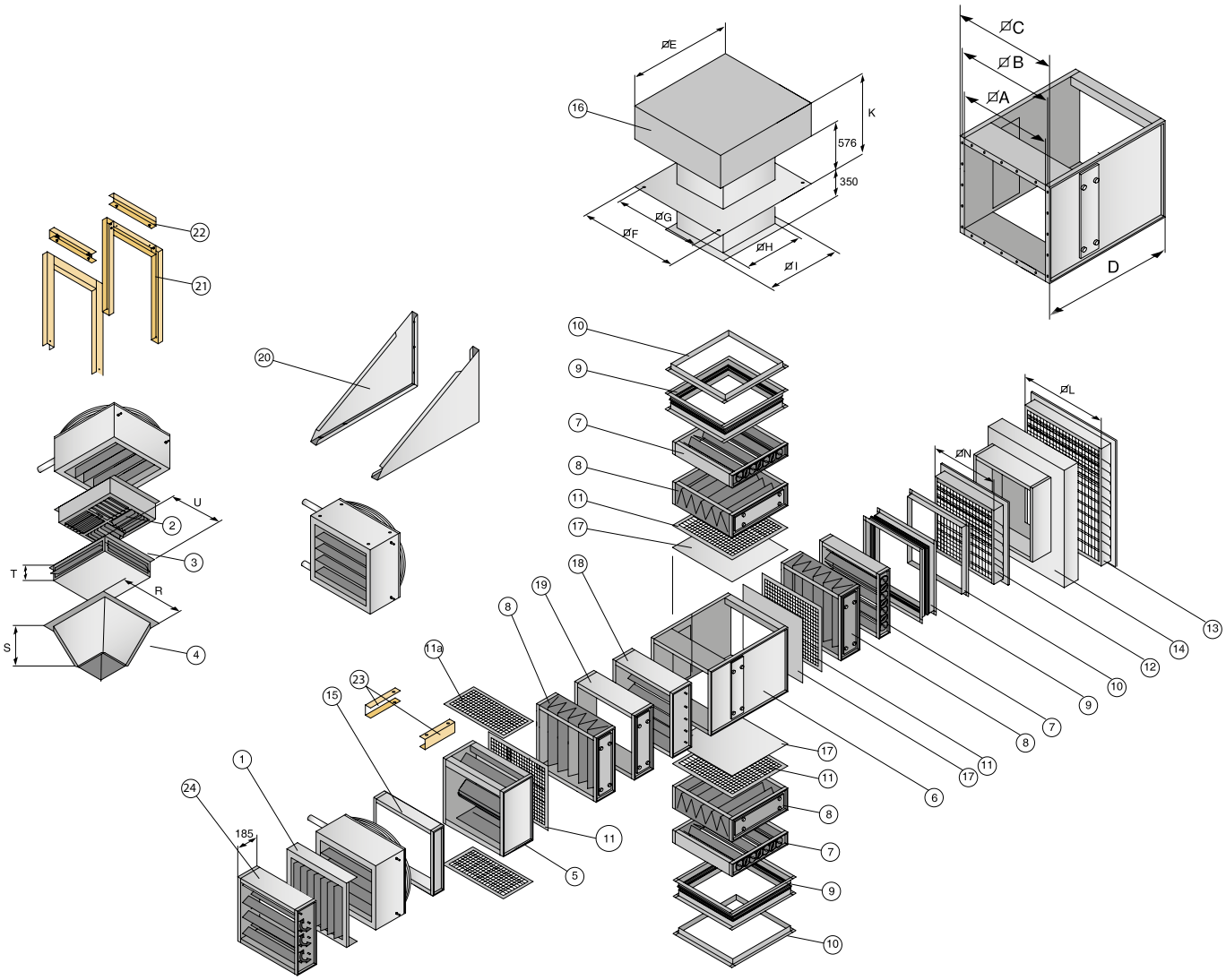

Position	Description
1	Vertical louvres
2	Downflow hood 4-sided vertical
3	Downflow hood 4-sided horizontal
4	Destratification hood
5	Mixing box (short) incl. dampers
6	Mixing box for dampers
7	Damper
8	Filter box with filter (EU 3)
9	Flexible connection
10	Corner profile
11	Mesh
11a	Mesh
12	Weather grill ≤ 50% fresh air intake
13	Weather grill > 50%-100% fresh air intake
14	Transition piece for 13
15	Empty section 120 mm
16	Rain cap incl. adhesive plate (aluminium)
17	Blanking plate
18	Motor protection damper
19	Empty section 240 mm
20	Wall bracket
21	Ceiling bracket, vertical
22	Shock absorber set for 21
23	Ceiling bracket, horizontal
24	induction damper

Type	A	B	C	D	E	F	G	H
100	390	415	443	463	690	740	690	380
200	520	545	573	593	920	920	820	510
300	670	695	723	743	1180	1240	975	665
400	800	835	853	873	1420	1240	1110	800

Type	I	K	L	N	R	S	T	U
100	440	800	516	386	439	212	120	406
200	570	895	666	516	573	253	151	530
300	720	940	796	666	724	300	175	680
400	860	1075	1005	796	853	329	220	815

Assembly/location suggestions

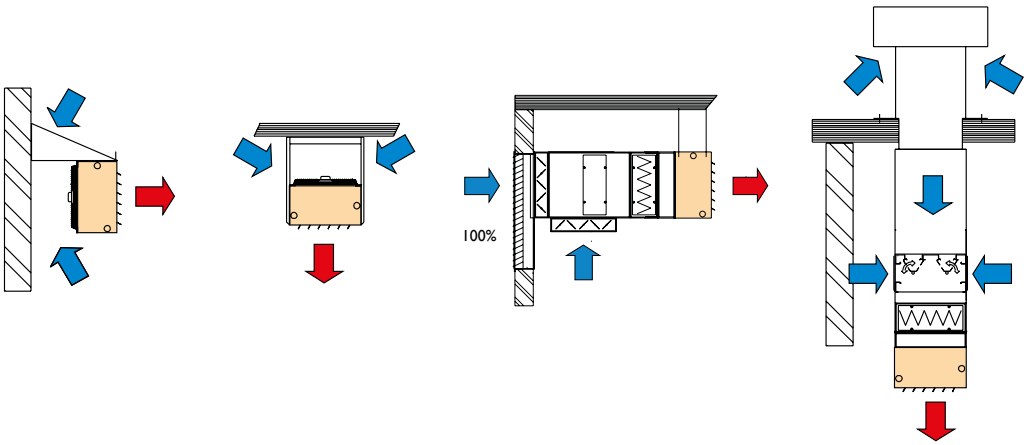

Tanner MDA maximum assembly height for

TYPE 100

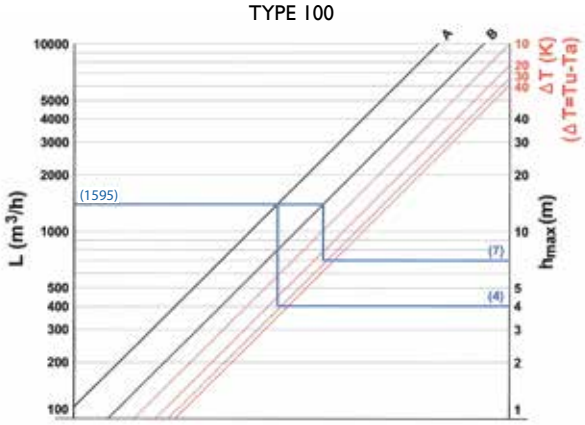

TYPE 200

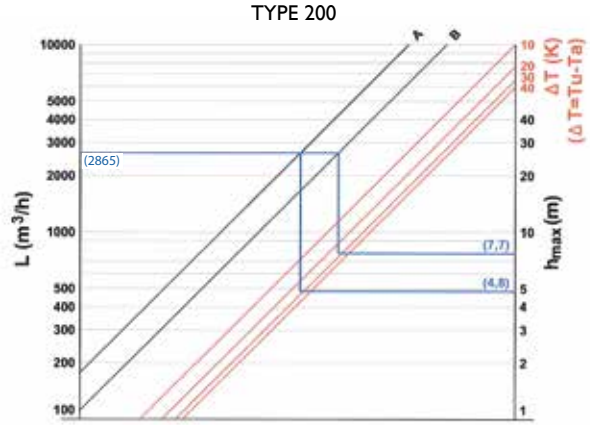

TYPE 300

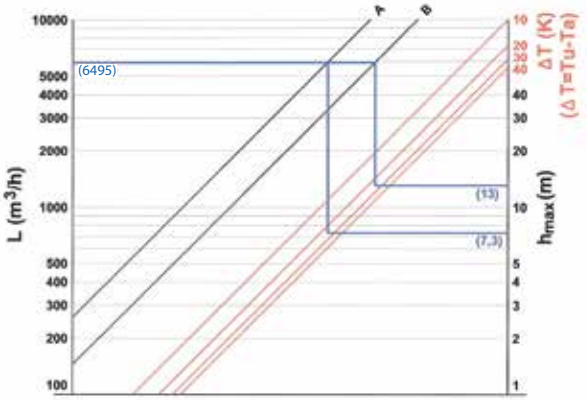

TYPE 400

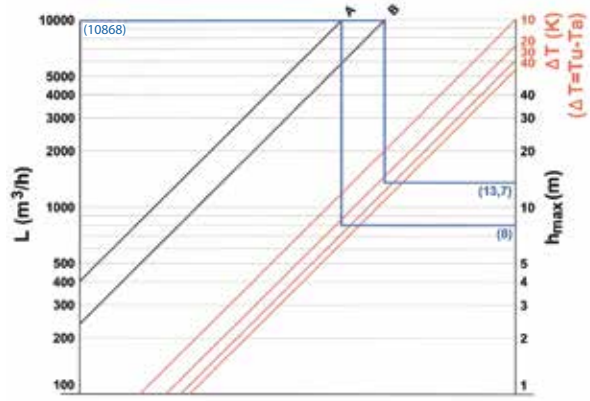

Calculation example: Tanner MDA 123L (Type 100)

- The table indicates that the air displacement with this unit is: L = 1595 m^3/h
- If the intake temperature (Ta) is 15 °C, the table shows that the outlet temperature (Tu) will be 42.8°C.
  The temperature difference is:
  Dt = Tu - Ta
  Dt = 42.8 - 15
  Dt = 27.8K

- The table (TYPE 100) indicates that:

A or the basic model, without accessories, the max. suspension height is: = 4m

B or the combination with a destratification hood, the max. suspension height is: = 7m

Controls

AC Motor

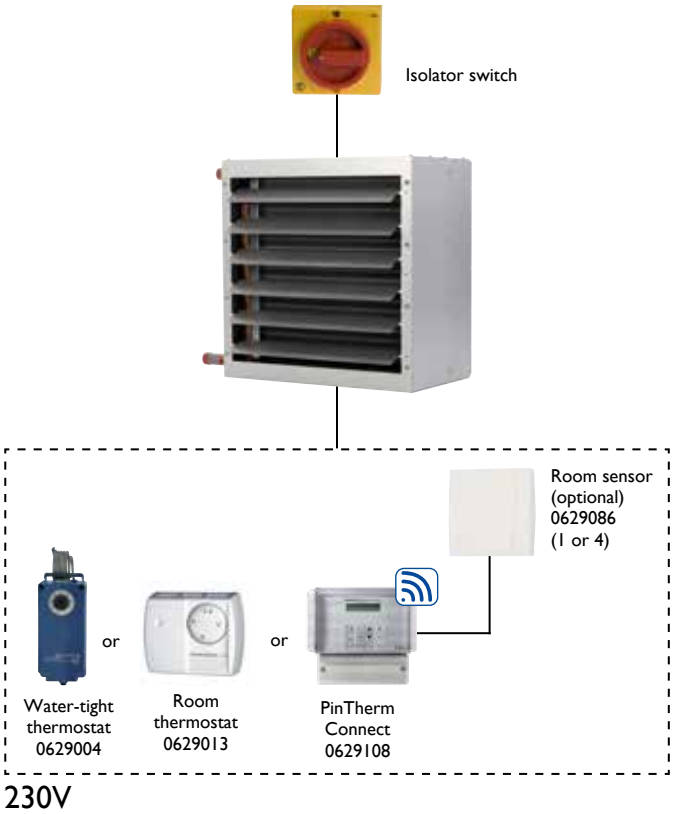

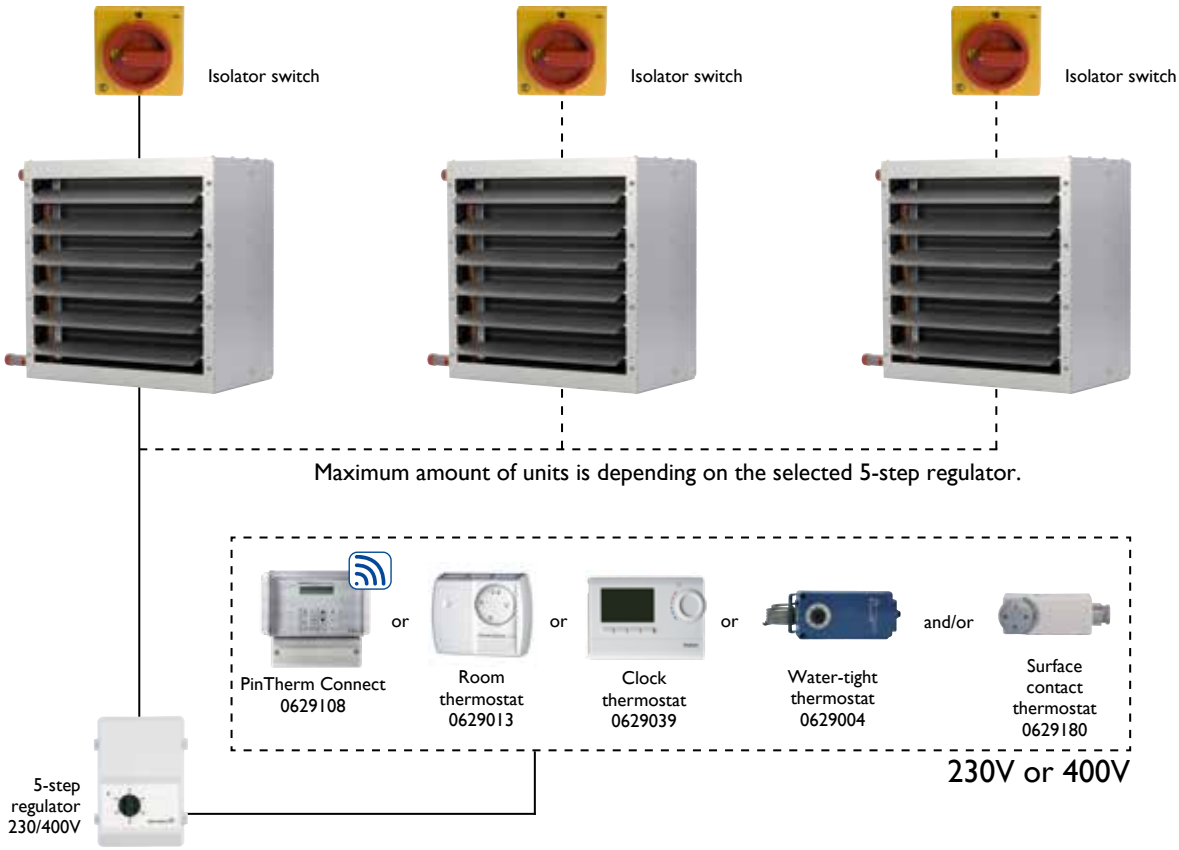

EC Motor

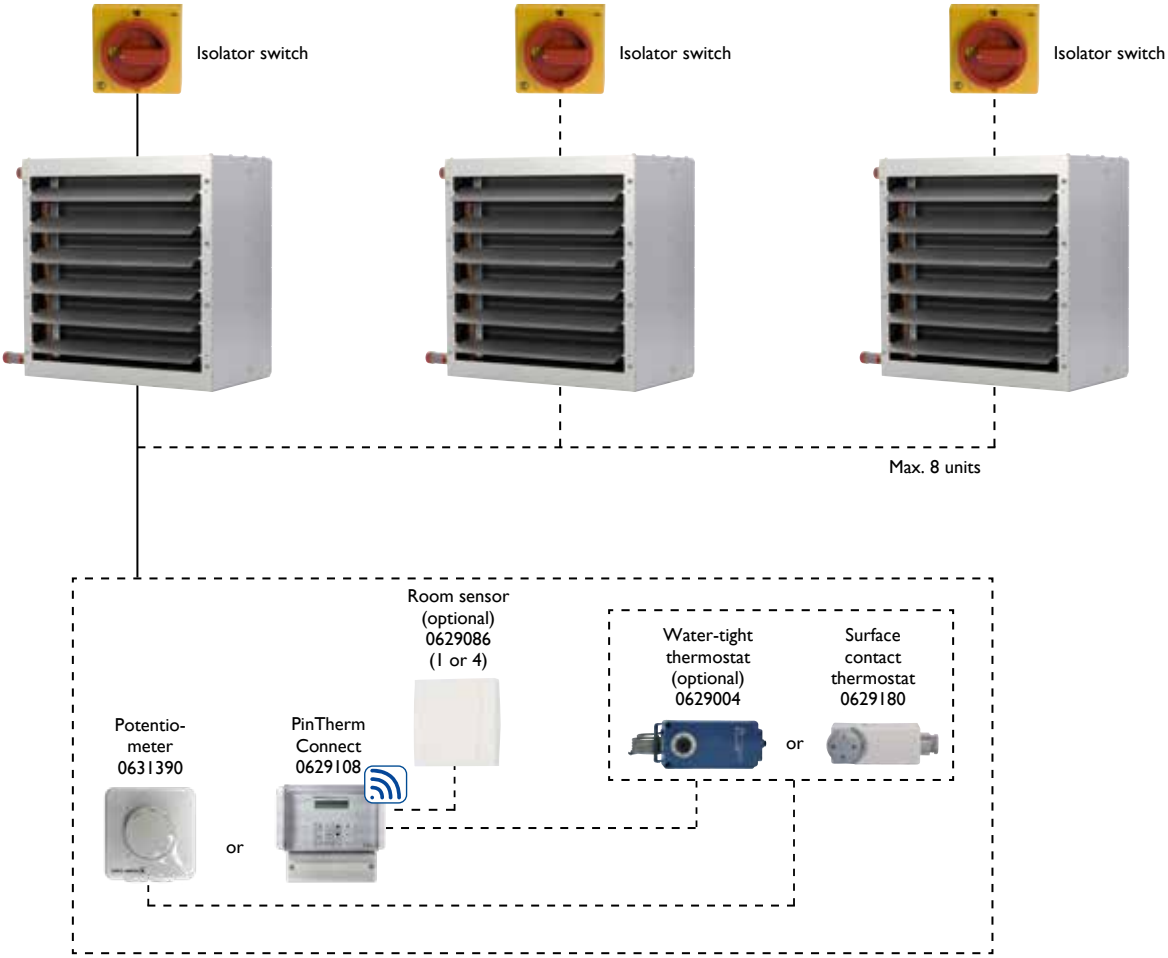
Isolator switch
Isolator switch
Isolator switch
Max. 8 units
Room sensor
(optional)
0629086
(1 or 4)
Water-tight
thermostat
(optional)
0629004
or
Surface
contact
thermostat
0629180
Potentio-
meter
0631390
or
PinTherm
Connect
0629108

Prices Mark TANNER MDA

PRODUCT - HOT WATER AIR HEATER TANNER MDA, 230V

Code nr.	Description	Price
5060056	MDA 121H, nominal power 18,0 kW	€ 717
5060057	MDA 131H, nominal power 22,1 kW	€ 772
5060058	MDA 141H, nominal power 25,1 kW	€ 799
5060256	MDA 221H, nominal power 32,4 kW	€ 892
5060257	MDA 231H, nominal power 42,0 kW	€ 970
5060258	MDA 241H, nominal power 46,6 kW	€ 1019
5060051	MDA 121L, nominal power 14,5 kW	€ 711
5060052	MDA 131L, nominal power 17,0 kW	€ 766
5060053	MDA 141L, nominal power 19,0 kW	€ 788
5060251	MDA 221L, nominal power 25,1 kW	€ 892
5060252	MDA 231L, nominal power 30,8 kW	€ 970
5060253	MDA 241L, nominal power 33,3 kW	€ 1019
5060451	MDA 321L, nominal power 52,7 kW	€ 1169
5060452	MDA 331L, nominal power 65,9 kW	€ 1351
5060453	MDA 341L, nominal power 72,1 kW	€ 1427
5060651	MDA 421L, nominal power 80,0 kW	€ 1515
5060652	MDA 431L, nominal power 101,0 kW	€ 1725
5060653	MDA 441L, nominal power 110,0 kW	€ 1807

PRODUCT - HOT WATER AIR HEATER TANNER MDA, 400V

Code nr.	Description	Price
5060066	MDA 123H, nominal power 18,0 kW	€ 717
5060067	MDA 133H, nominal power 22,1 kW	€ 772
5060068	MDA 143H, nominal power 25,1 kW	€ 810
5060266	MDA 223H, nominal power 32,4 kW	€ 905
5060267	MDA 233H, nominal power 42,0 kW	€ 981
5060268	MDA 243H, nominal power 46,6 kW	€ 1031
5060061	MDA 123L, nominal power 14,5 kW	€ 788
5060062	MDA 133L, nominal power 17,0 kW	€ 844
5060063	MDA 143L, nominal power 19,0 kW	€ 866
5060261	MDA 223L, nominal power 26,2 kW	€ 892
5060262	MDA 233L, nominal power 32,4 kW	€ 970
5060263	MDA 243L, nominal power 35,1 kW	€ 1019
5060461	MDA 323L, nominal power 52,7 kW	€ 1318
5060462	MDA 333L, nominal power 65,9 kW	€ 1494
5060463	MDA 343L, nominal power 72,1 kW	€ 1548
5060661	MDA 423L, nominal power 84,0 kW	€ 1505
5060662	MDA 433L, nominal power 107,0 kW	€ 1703
5060663	MDA 443L, nominal power 117,0 kW	€ 1780

PRODUCT - HOT WATER AIR HEATER TANNER MDA WITH EC-MOTOR, 230V

Code nr.	Description	Price
5063056	MDA 121EC, nominal power 18,0 kW	€ 977
5063057	MDA 131EC, nominal power 22,1 kW	€ 1040
5063058	MDA 141EC, nominal power 25,1 kW	€ 1119
5063256	MDA 221EC, nominal power 32,4 kW	€ 1646
5063257	MDA 231EC, nominal power 42,0 kW	€ 1714
5063258	MDA 241EC, nominal power 46,6 kW	€ 1813
5063451	MDA 321EC, nominal power 52,7 kW	€ 1853
5063452	MDA 331EC, nominal power 65,9 kW	€ 2001
5063453	MDA 341EC, nominal power 72,1 kW	€ 2124
5063651	MDA 421EC, nominal power 80,0 kW	€ 2639
5063652	MDA 431EC, nominal power 101,0 kW	€ 2740
5063653	MDA 441EC, nominal power 110,0 kW	€ 2880

PRODUCT - TANNER MDA+ FOR HEATING AND COOLING, 230V, 90/70 -15 °C, 7/12 - 28 °C

Code nr.	Description	Price
5060106	MDA+ 121H for heating and cooling, incl. drip tray, nominal cooling capacity 4,46 kW	€ 943
5060107	MDA+ 131H for heating and cooling, incl. drip tray, nominal cooling capacity 5,67 kW	€ 989
5060108	MDA+ 141H for heating and cooling, incl. drip tray, nominal cooling capacity 7,88 kW	€ 1007
5060126	MDA+ 221H for heating and cooling, incl. drip tray, nominal cooling capacity 8,14 kW	€ 1142
5060127	MDA+ 231H for heating and cooling, incl. drip tray, nominal cooling capacity 10,5 kW	€ 1211
5060128	MDA+ 241H for heating and cooling, incl. drip tray, nominal cooling capacity 14,1 kW	€ 1250
5060101	MDA+ 121L for heating and cooling, incl. drip tray, nominal cooling capacity 3,6 kW	€ 943
5060102	MDA+ 131L for heating and cooling, incl. drip tray, nominal cooling capacity 4,37 kW	€ 989
5060103	MDA+ 141L for heating and cooling, incl. drip tray, nominal cooling capacity 6,15 kW	€ 1007
5060121	MDA+ 221L for heating and cooling, incl. drip tray, nominal cooling capacity 6,32 kW	€ 1129
5060122	MDA+ 231L for heating and cooling, incl. drip tray, nominal cooling capacity 7,71 kW	€ 1197
5060123	MDA+ 241L for heating and cooling, incl. drip tray, nominal cooling capacity 10,4 kW	€ 1236
5060151	MDA+ 321L for heating and cooling, incl. drip tray, nominal cooling capacity 13,3 kW	€ 1479
5060152	MDA+ 331L for heating and cooling, incl. drip tray, nominal cooling capacity 16,4 kW	€ 1628
5060153	MDA+ 341L for heating and cooling, incl. drip tray, nominal cooling capacity 22,3 kW	€ 1697
5060161	MDA+ 421L for heating and cooling, incl. drip tray, nominal cooling capacity 20,1 kW	€ 1763
5060162	MDA+ 431L for heating and cooling, incl. drip tray, nominal cooling capacity 25,4 kW	€ 1949
5060163	MDA+ 441L for heating and cooling, incl. drip tray, nominal cooling capacity 35,4 kW	€ 2023

PRODUCT - TANNER MDA+ FOR HEATING AND COOLING, 400V, 90/70 -15 °C, 7/12 - 28 °C

Code nr.	Description	Price
5060116	MDA+ 123H for heating and cooling, incl. drip tray, nominal cooling capacity 4,46 kW	€ 955
5060117	MDA+ 133H for heating and cooling, incl. drip tray, nominal cooling capacity 5,67 kW	€ 1003
5060118	MDA+ 143H for heating and cooling, incl. drip tray, nominal cooling capacity 7,88 kW	€ 1019
5060136	MDA+ 223H for heating and cooling, incl. drip tray, nominal cooling capacity 8,14 kW	€ 1159
5060137	MDA+ 233H for heating and cooling, incl. drip tray, nominal cooling capacity 10,5 kW	€ 1228
5060138	MDA+ 243H for heating and cooling, incl. drip tray, nominal cooling capacity 14,1 kW	€ 1267
5060111	MDA+ 123L for heating and cooling, incl. drip tray, nominal cooling capacity 3,6 kW	€ 1044
5060112	MDA+ 133L for heating and cooling, incl. drip tray, nominal cooling capacity 4,37 kW	€ 1092
5060113	MDA+ 143L for heating and cooling, incl. drip tray, nominal cooling capacity 6,15 kW	€ 1108
5060131	MDA+ 223L for heating and cooling, incl. drip tray, nominal cooling capacity 6,6 kW	€ 1199
5060132	MDA+ 233L for heating and cooling, incl. drip tray, nominal cooling capacity 8,1 kW	€ 1267
5060133	MDA+ 243L for heating and cooling, incl. drip tray, nominal cooling capacity 10,9 kW	€ 1307
5060156	MDA+ 323L for heating and cooling, incl. drip tray, nominal cooling capacity 13,3 kW	€ 1554
5060157	MDA+ 333L for heating and cooling, incl. drip tray, nominal cooling capacity 16,4 kW	€ 1703
5060158	MDA+ 343L for heating and cooling, incl. drip tray, nominal cooling capacity 22,3 kW	€ 1772
5060166	MDA+ 423L for heating and cooling, incl. drip tray, nominal cooling capacity 21,1 kW	€ 1773
5060167	MDA+ 433L for heating and cooling, incl. drip tray, nominal cooling capacity 26,9 kW	€ 1958
5060168	MDA+ 443L for heating and cooling, incl. drip tray, nominal cooling capacity 37,5 kW	€ 2035

PRODUCT - TANNER MDA+ FOR HEATING AND COOLING, 230V, 90/70 -15 °C, 7/12 - 28 °C WITH EC-MOTOR

Code nr.	Description	Price
5060171	MDA+ 121EC for heating and cooling, incl. drip tray, nominal cooling capacity 4,46 kW	€ 1196
5060172	MDA+ 131EC for heating and cooling, incl. drip tray, nominal cooling capacity 5,67 kW	€ 1244
5060173	MDA+ 141EC for heating and cooling, incl. drip tray, nominal cooling capacity 7,88 kW	€ 1261
5060176	MDA+ 221EC for heating and cooling, incl. drip tray, nominal cooling capacity 8,14 kW	€ 1555
5060177	MDA+ 231EC for heating and cooling, incl. drip tray, nominal cooling capacity 10,5 kW	€ 1624
5060178	MDA+ 241EC for heating and cooling, incl. drip tray, nominal cooling capacity 14,1 kW	€ 1663
5060181	MDA+ 321EC for heating and cooling, incl. drip tray, nominal cooling capacity 13,3 kW	€ 1880
5060182	MDA+ 331EC for heating and cooling, incl. drip tray, nominal cooling capacity 16,4 kW	€ 2028
5060183	MDA+ 341EC for heating and cooling, incl. drip tray, nominal cooling capacity 22,3 kW	€ 2097
5060186	MDA+ 421EC for heating and cooling, incl. drip tray, nominal cooling capacity 20,1 kW	€ 2732
5060187	MDA+ 431EC for heating and cooling, incl. drip tray, nominal cooling capacity 25,4 kW	€ 2918
5060188	MDA+ 441EC for heating and cooling, incl. drip tray, nominal cooling capacity 35,4 kW	€ 2993

ACCESSORIES

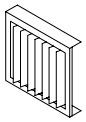

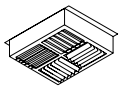

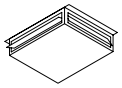

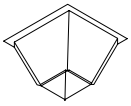

Code nr.	Description	Price
5064011	Vertical louvres MDA type 100	€ 134
5064012	Vertical louvres MDA type 200	€ 156
5064013	Vertical louvres MDA type 300	€ 169
5064014	Vertical louvres MDA type 400	€ 169
5064021	Downflow hood 4-side vert. MDA type 100	€ 111
5064022	Downflow hood 4-side vert. MDA type 200	€ 151
5064023	Downflow hood 4-side vert. MDA type 300	€ 161
5064024	Downflow hood 4-side vert. MDA type 400	€ 229
5064001	Downflow hood 4-side hor. MDA type 100	€ 134
5064002	Downflow hood 4-side hor. MDA type 200	€ 156
5064003	Downflow hood 4-side hor. MDA type 300	€ 181
5064004	Downflow hood 4-side hor. MDA type 400	€ 218
5064016	Destrification hood MDA type 100	€ 111
5064017	Destrification hood MDA type 200	€ 151
5064018	Destrification hood MDA type 300	€ 161
5064019	Destrification hood MDA type 400	€ 229

For an good selection of specific projects please contact our sales department

ACCESSORIES - CONTROL

Code nr.	Description	Price
0616186	Control box 5-steps, 230V, 6,0A*	€ 301
0616188	Control box 5-steps, 230V, 12,0A*	€ 560
0616189	Control box 5-steps, 230V, 14,0A*	€ 610
0616162	Control box 5-steps, 400V, 2A*	€ 669
0616164	Control box 5-steps, 400V, 4A*	€ 935
0616166	Control box 5-steps, 400V, 7A*	€ 1108
0616170	High / low / off control, 400V, 7A*	€ 365
0631390	Potentiometer 10K with on/off contact IP54**	€ 104
0631163	Isolator switch, separate delivery, 230V (4 poles)	€ 64
0631167	Isolator switch, separate delivery, 400V (8 poles)	€ 81
0629013	Room thermostat 230V, (4A)	€ 51
0629004	Water resistant room thermostat, 230V, IP65	€ 224
0629180	Surface contact thermostat (4A)	€ 64
0629039	Clock thermostat (1A)	€ 350
0629108	PinTherm Connect - programmable room thermostat with Ethernet and Modbus, 230V (4A)	€ 471
0629086	Room sensor only in combination with 0629108	€ 80

For function explanation see chapter on control

ACCESSORIES - ASSEMBLY

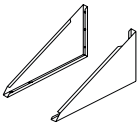

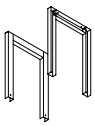

Code nr.	Description	Price
5064047	Wall brackets horizontal, MDA type 100 - 400	€ 58
5064055	Ceiling brakets horizontal, MDA type 100 - 400	€ 52
5064116	Mounting bracket	€ 70
5064051	Ceiling brackets vertical for MDA type 100	€ 175
5064052	Ceiling brackets vertical for MDA type 200	€ 181
5064053	Ceiling brackets vertical for MDA type 300	€ 186
5064054	Ceiling brackets vertical for MDA type 400	€ 186
5064056	Shock absorber set for above mentioned brackets MDA type 100 only in combination with 5064051	€ 83
5064057	Shock absorber set for above mentioned brackets MDA type 200 only in combination with 5064052	€ 84
5064058	Shock absorber set for above mentioned brackets MDA type 300 only in combination with 5064053	€ 94
5064059	Shock absorber set for above mentioned brackets MDA type 400 only in combination with 5064054	€ 99

ACCESSORIES - COLOURS ***

Description	Price
MDA Type 100 Accessories provided with colour 1 to 3 pieces (by piece)	€ 110
MDA Type 100 Accessories provided with colour 4 to 10 pieces (by piece)	€ 95
MDA Type 100 Accessories provided with colour for more than 10 pieces (by piece)	€ 75
TANNER MDA 100 provided with colour	€ 65
MDA Type 200 Accessories provided with colour 1 to 3 pieces (by piece)	€ 120
MDA Type 200 Accessories provided with colour 4 to 10 pieces (by piece)	€ 105
MDA Type 200 Accessories provided with colour for more than 10 pieces (by piece)	€ 75
TANNER MDA 200 provided with colour	€ 75
MDA Type 300 Accessories provided with colour 1 to 3 pieces (by piece)	€ 135
MDA Type 300 Accessories provided with colour 4 to 10 pieces (by piece)	€ 115
MDA Type 300 Accessories provided with colour for more than 10 pieces (by piece)	€ 80
TANNER MDA 300 provided with colour	€ 80
MDA Type 400 Accessories provided with colour 1 to 3 pieces (by piece)	€ 140
MDA Type 400 Accessories provided with colour 4 to 10 pieces (by piece)	€ 120
MDA Type 400 Accessories provided with colour for more than 10 pieces (by piece)	€ 85
TANNER MDA 400 provided with colour	€ 95

REMARK

* Does not apply to Tanner MDA with EC-motor.
** Only applies to Tanner MDA with EC-motor.
*** These prices are only for the Mark standard RAL-colours: 3002 red, 1028 yellow, 6010 green, 7016 gray, 8014 brown, 9001 beige white, 5009 blue, 2009 orange, 1019 beige

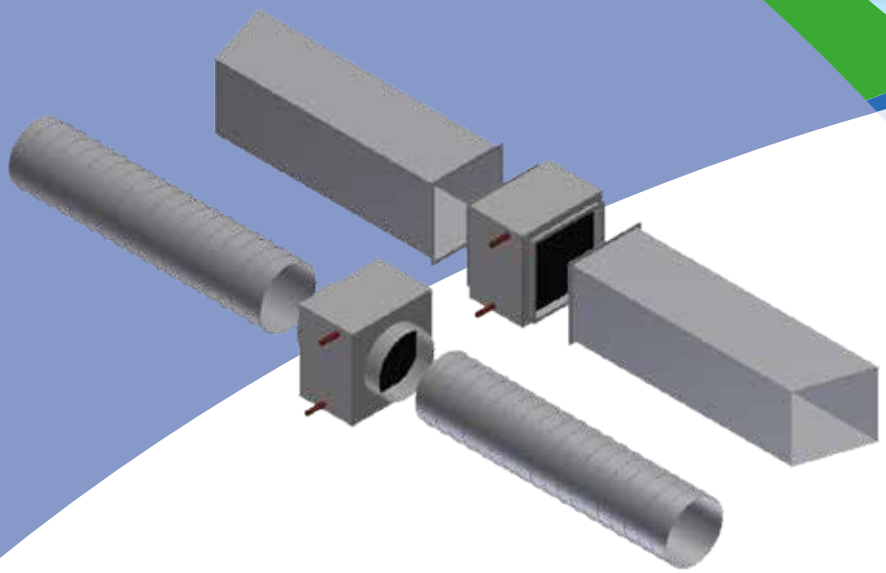

Duct hot water heater

The TANNER MD water-supplied air heater should be located directly in a duct to (post) heat intake air. The MD is available in a wide range of capacities ranging from 14,5 to 117 kW.

Features
– Manufactured with a corrosion-resistant aluzinc housing as standard
– Copper/aluminium heat exchanger

The round version is optionally available with rubber sealing.

See Tanner MDA for technical specifications.

Dimensions

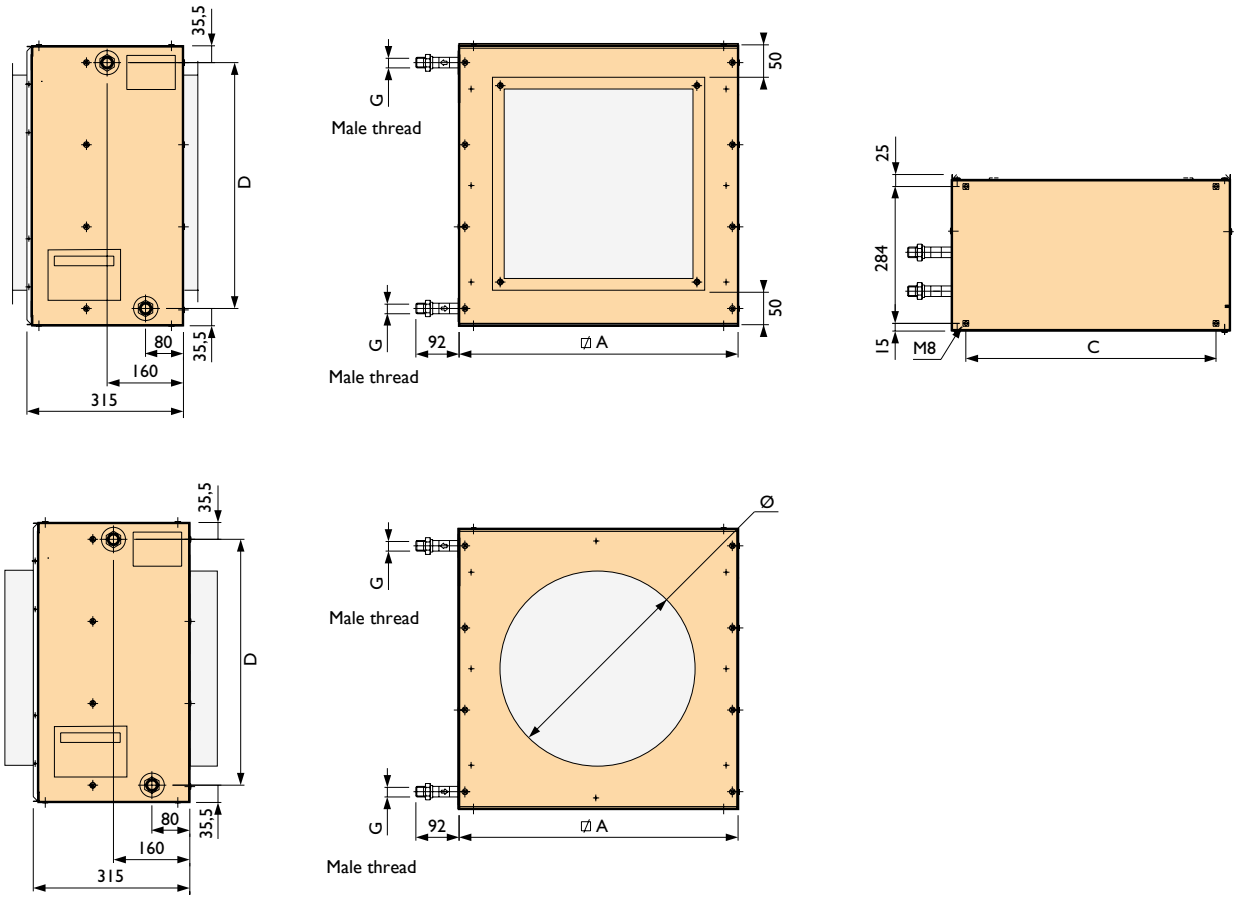

Type	A	C	D	G 1R	G 2R	G 3R	G 4R	Ø
100	450	387	379	1"	1"	1"	1"	315/400
200	580	517	509	1"	1"	1"	1"	450/500
300	730	667	659	1"	1"	1 1/4"	1 1/4"	600/630
400	860	797	789	1"	1 1/4"	1 1/2"	1 1/2"	710

Technical information

TYPE DESIGNATION

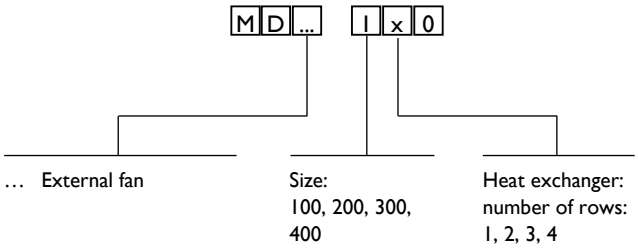

See Tanner MDA tables on pages 46/47 for heat delivery.

Prices Mark TANNER MD

PRODUCT - TANNER MD DUCT HEATER WITH ROUND CONNECTION

Code nr.	Description	Price
3189051	Tanner MD 120 - Ø 355mm	€ 454
3189052	Tanner MD 130 - Ø 355mm	€ 499
3189053	Tanner MD 140 - Ø 355mm	€ 514
3189056	Tanner MD 220 - Ø 500mm	€ 567
3189057	Tanner MD 230 - Ø 500mm	€ 631
3189058	Tanner MD 240 - Ø 500mm	€ 669
3189061	Tanner MD 320 - Ø 630mm	€ 744
3189062	Tanner MD 330 - Ø 630mm	€ 885
3189063	Tanner MD 340 - Ø 630mm	€ 949
3189066	Tanner MD 420 - Ø 710mm	€ 974
3189067	Tanner MD 430 - Ø 710mm	€ 1148
3189068	Tanner MD 440 - Ø 710mm	€ 1220

PRODUCT - TANNER MD DUCT HEATER WITH SQUARE CONNECTION

Code nr.	Description	Price
3189071	Tanner MD 120 - 300mm	€ 476
3189072	Tanner MD 130 - 300mm	€ 521
3189073	Tanner MD 140 - 300mm	€ 536
3189076	Tanner MD 220 - 450mm	€ 566
3189077	Tanner MD 230 - 450mm	€ 630
3189078	Tanner MD 240 - 450mm	€ 668
3189081	Tanner MD 320 - 550mm	€ 689
3189082	Tanner MD 330 - 550mm	€ 829
3189083	Tanner MD 340 - 550mm	€ 894
3189086	Tanner MD 420 - 700mm	€ 879
3189087	Tanner MD 430 - 700mm	€ 1054
3189088	Tanner MD 440 - 700mm	€ 1125

TANNER MBA

WATER-SUPPLIED AIR HEATER

The luxury hot water air heater

The Mark Tanner MBA is an aesthetically attractive water-supplied suspended hot water air heater with a stepless modulating EC axial fan. The units are available with capacities up to 67.0 kW, making them more suitable for heating with low water temperatures.

With its low height, the MBA is suited to heat low-ceilinged rooms, such as showrooms, offices, dressing rooms and shops. By using this unit, a room can be heated up in a short period of time.

Features:
- Attractive appearance
- Simple installation
- Low maintenance
- Low noise level
- Powerful EC-fan
- RAL 9016 powder coating

Remote connection possible with the PinTherm Connect!

Dimensions

Type	A	B	C	D	E	F	G	H
MBA 750	750	650	239	293	585	135	24	3/4" M
MBA 900	900	770	239	356	585	135	24	1" M

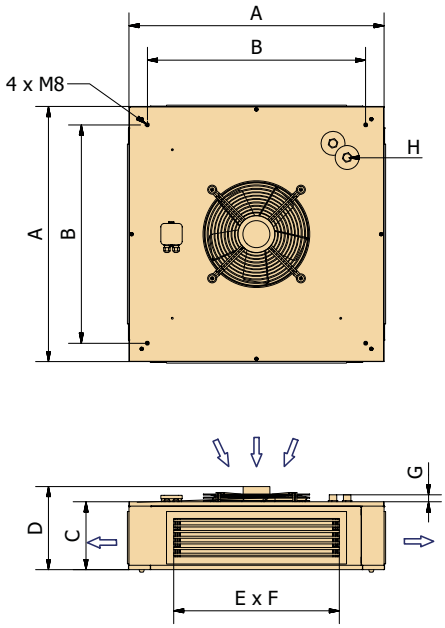

General data:
- Strip spacing: 2.1mm
- Maximum water inlet temperature: 120°C
- Maximum working pressure: 10 bar
- Maximum room temperature: ± 40 °C

TYPE DESIGNATION

MBA 75 2

Size: 750, 900

Heat exchanger: number of rows: 2,3

All motors EC 230V

Technical information

Type		752	753	902	903
90/70 T 15	kW	34,9	44,7	53,0	68,6
Air outlet temperature at the exchanger	°C	46,8	57,9	44,7	54,5
80/60 T 15	kW	28,9	37,5	44,1	57,6
Air outlet temperature at the exchanger	°C	41,4	50,9	39,7	48,1
60/40 T 15	kW	16,5	22,5	25,9	34,0
Air outlet temperature at the exchanger	°C	30,4	36,6	29,5	35,0
45/40-15	kW	14,9	18,9	22,7	29,0
Air outlet temperature at the exchanger	°C	28,6	33.1	27,7	32,1
35/30-15	kW	9,0	11,7	13,8	18,1
Air outlet temperature at the exchanger	°C	23,2	26.2	22,7	25,7
Water resistance at 90/70 T15	kPa	4,7	14,3	12,5	25,2
Speed	rpm	variable	variable	variable	variable
Air displacement maximum	m^3/h	3250	3090	5300	5035
Noise level (3m) (high level)	dB(A)	55	55	59	59
Weight	kg	32,5	33,5	36	37
Consumed current 230V	A	0,95	0,95	2,2	2,2

SOUND SPECTRUM AT MAXIMUM SPEED

		63Hz	125Hz	250Hz	500Hz	1kHz	2kHz	4kHz	8kHz
MBA 752	dB	45	52	54	53	49	47	40	31
MBA 902	dB	56	59	62	57	53	50	46	41

Assembly / location suggestions

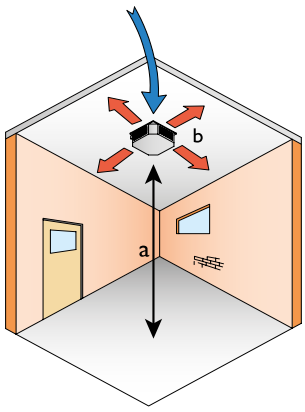

Type	a (m)	b
MBA 750	2,5	4
MBA 900	3,4	5

Controls

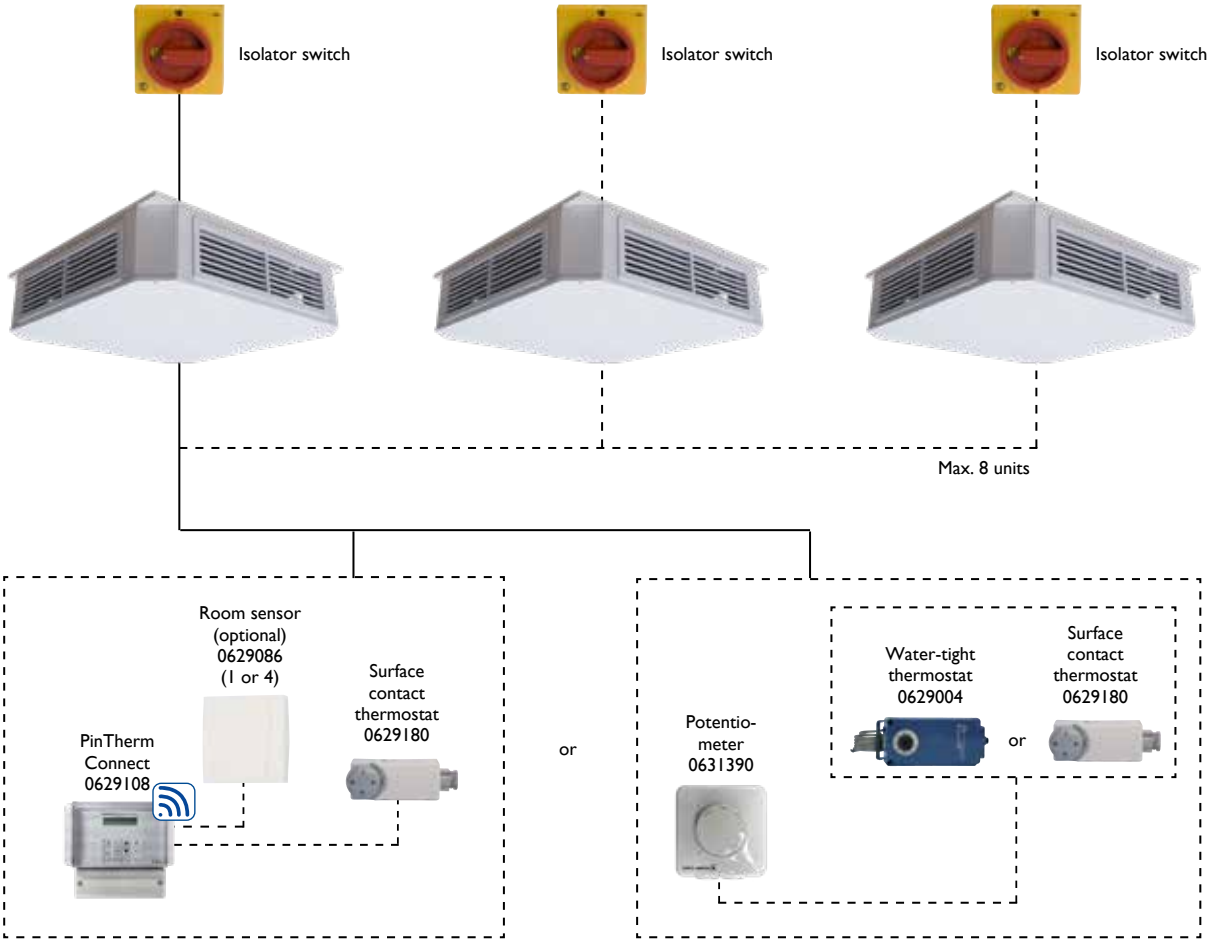

Prices Mark TANNER MBA

PRODUCT - WARM WATER AIR HEATER TANNER MBA, 230V, 90/70 - 15°C

Code nr.	Description	Price
5997110	MBA 752, nominal power 34,9 kW	€ 1550
5997111	MBA 753, nominal power 44,7 kW	€ 1750
5997112	MBA 902, nominal power 53,0 kW	€ 1950
5997113	MBA 903, nominal power 68,6 kW	€ 2150

ACCESSORIES - CONTROL

Code nr.	Description	Price
0629108	PinTherm Connect - programmable room thermostat with Ethernet and Modbus, 230V (4A)	€ 471
0629086	Room sensor only in combination with 0629108	€ 80
0629004	Water resistant room thermostat, 230V, IP65	€ 224
0629039	Clock thermostat (1A)	€ 350
0631163	Isolator switch, separate delivery, 230V (4 poles)	€ 64

For function explanation see chapter on control

TANNER CLA

WATER-SUPPLIED AIR HEATER

Ceiling cassette unit for heating and cooling

The Mark TANNER CLA is a water-supplied air heater intended for installation in a suspended ceiling. The cassette unit is equipped with an EC motor.

The CLA has the same appearance as the internal part of a split air conditioning unit. The unit can also be fitted with a design plate in color that is suitable for placement in rooms where high-quality requirements are imposed on interior architecture.

The CLA is applicable in, for example, showrooms, offices, changing rooms and shops.

Characteristics
- Modern design
- Low maintenance
- Powerful energy-efficient EC motor
- Quiet
- Built-in protected condensate pump
- Available with one or two water circuits

Dimensions

TYPE 070/090/094

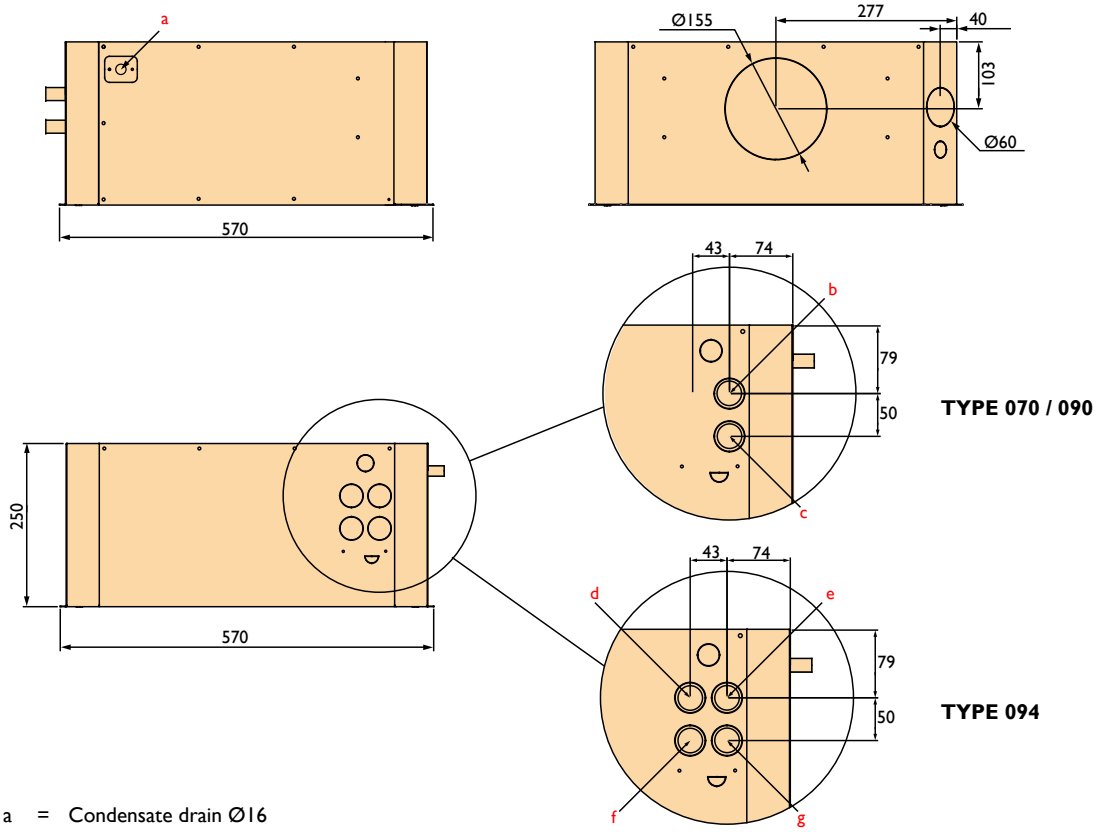

a = Condensate drain Ø16

TYPE 070 / 090 / 150 (2-pipe)

b = Return

c = Supply

TYPE 150 / 094 (4-pipe)

d = Return heating

e = Return cooling

f = Supply heating

g = Supply cooling

TYPE 150/154

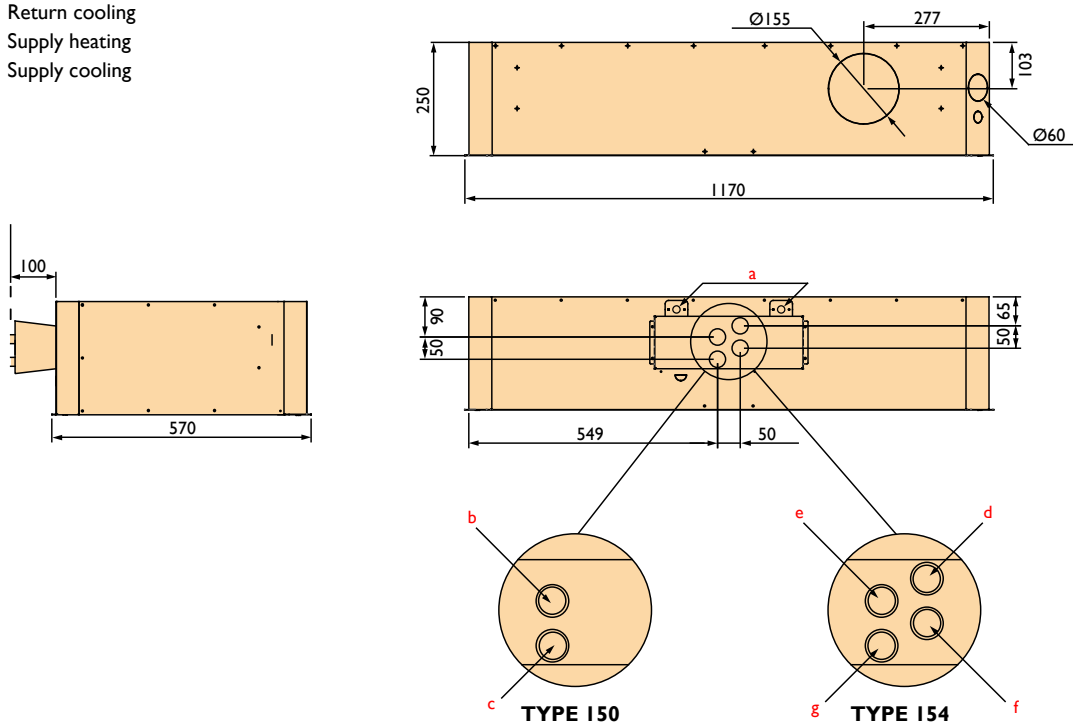

Technical information

Type		070	090	094	150	154
Total cooling capacity	H - kW (10V)	4,32	6,07	4,82	11,24	8,87
	M - kW (6V)	2,88	4,01	3,30	9,77	7,80
	L - kW (2V)	1,27	1,89	1,58	6,41	5,33
Sensible cooling capacity	H - kW (10V)	2,99	4,01	3,16	7,22	5,66
	M - kW (6V)	2,06	2,69	2,19	6,29	4,99
	L - kW (2V)	1,04	1,28	1,12	4,17	3,43
Water flow	l/h (10V)	742	1041	980	1928	1522
Pressure drop	kPa	3,5	9,0	16,2	16,7	28,8
Heating capacity*	H - kW (10V)	5,89	8,16	4,27	14,96	7.69
	M - kW (6V)	3,93	5,42	3,03	12,99	6.84
	L - kW (2V)	1,95	2,47	1,58	8,52	4.84
Water flow*	l/h (10V)	259	359	188	657	338
Heating capacity**	H - kW (10V)	5,85	7,47	4,17	13,20	7.3
	M - kW (6V)	3,96	4,90	2,95	11,39	6.48
	L - kW (2V)	1,94	2,29	1,59	7,34	4.55
Water flow**	l/h (10V)	742	1041	529	1928	926
Pressure drop	kPa	3,1	8,30	15,7	15,7	30.9
Air amount	H - m^3/h (10V)	980	980	980	1620	1620
	M - m^3/h (6V)	590	590	590	1360	1360
	L - m^3/hs (2V)	250	250	250	820	820
Sound level	dB(A) (10V)	48	48	48	51	51
Supply voltage	V/Ph/Hz	210-230/1/50-60				
Power consumption	W (10V)	41	45	45	85	85
Current consumption	A (10V)	0,36	0,42	0,42	0,55	0,55
Water connections	Nr. x "	2 x 3/4"F	2 x 3/4"F	4 x 3/4"F	2 x 3/4"F	4 x 3/4"F
Weight	kg	18	19	19	39	39

H = high speed, M = medium speed, L = low speed
Water temperature cooling: 7/12°C, T=27, rh=50
* Water temperature heating: 60/40°C, T=20
** Water temperature heating: 50/43°C, T=20

Assembly/location suggestions

Throw = 3,5M

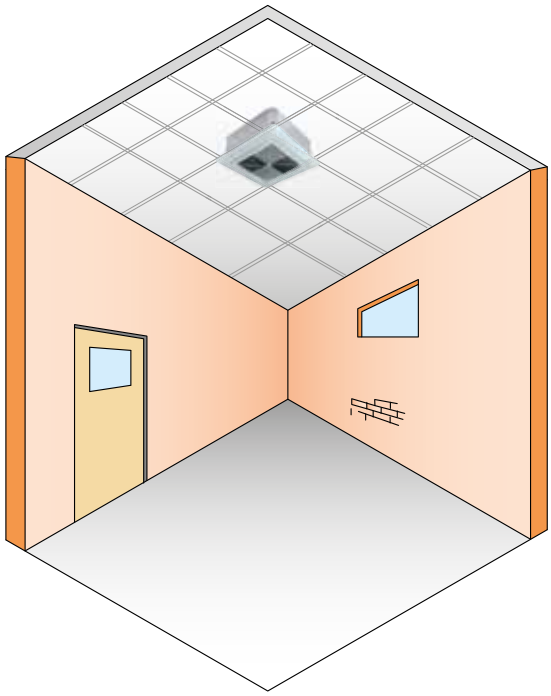

Controls

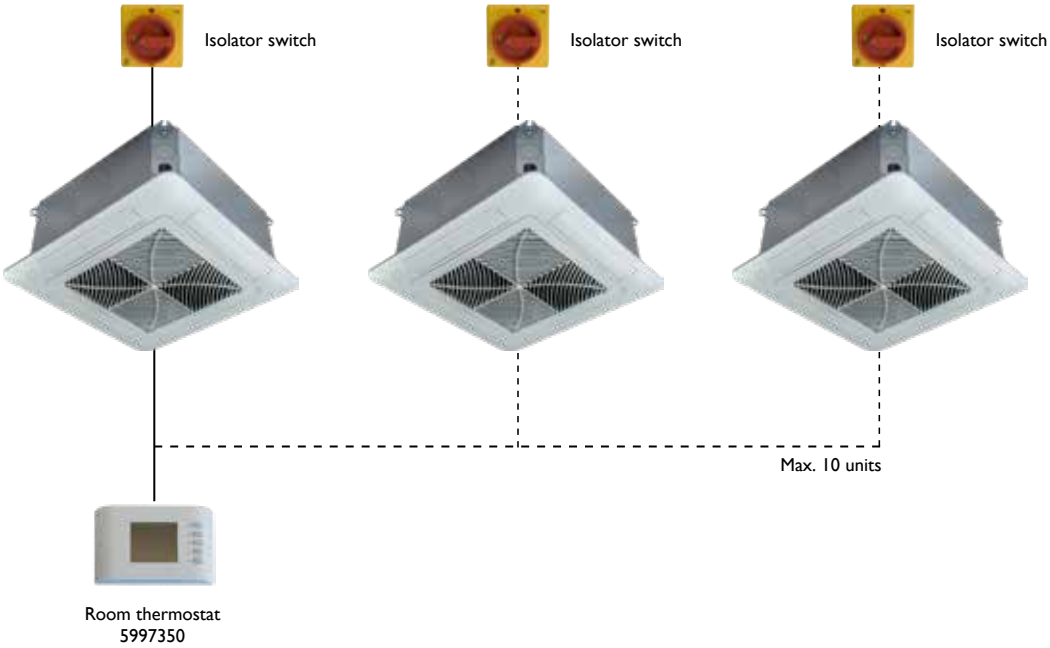

Prices Mark TANNER CLA

PRODUCT - TANNER CLA CEILING CASSETTE UNIT WITH EC-MOTOR

Code nr.	Description	Price
5997301	Ceiling cassette unit CLA 070 EC - 600x600 mm	€ 1866
5997303	Ceiling cassette unit CLA 090 EC - 600x600 mm	€ 2017
5997305	Ceiling cassette unit CLA 094 EC - 600x600 mm	€ 2110
5997307	Ceiling cassette unit CLA 150 EC - 1200x600 mm	€ 3471
5997309	Ceiling cassette unit CLA 154 EC - 1200x600 mm	€ 3649

ACCESSORIES - CONTROL

Code nr.	Description	Price
5997350	Room thermostat with speed control	€ 270
5997353	On-Off servomotor (230V) for control valve	€ 93
5997354	On-Off servomotor (24V) for control valve	€ 104
5997355	On-Off servomotor with end contact (230V) for control valve	€ 116
5997356	On-Off servomotor with end contact (24V) for control valve	€ 126
5997357	Modulating servomotor 0-10V for control valve	€ 278
0631163	Isolator switch 4-poles 230V, separate delivery	€ 64

For function explanations see chapter on control

ACCESSOIRES - WATER-SIDED CONTROLS

Code nr.	Description	Price
5997360	2-way valve 3/4" without servomotor mounted	€ 116
5997361	3-way valve 3/4" without servomotor mounted	€ 139
5997365	Ball valve 3/4" set of 2 pieces	€ 93

ACCESSORIES - OTHER

Code nr.	Description	Price
5997370	Design metal front color RAL 9003	€ 278

LDA SWIRL

WATER-SUPPLIED AIR HEATER

Design air heater for grid type ceilings

The Mark LDA SWIRL design water-supplied air heater has been developed to fit into 600x600 grid type ceilings. The unit is easy to install due to its compact dimensions and is also perfectly suitable for rooms with low ceilings. Of course it is also easy to install as a free hanging unit.

Due to the modulating EC fan, the Mark LDA SWIRL is available for a wide range of air volumes and heating capacities. The EC fan also ensures a quiet and energy efficient unit.

The LDA is designed for use in stores, offices and hospitals.

Features:
- RAL 9010 powder coating (other colours on request)
- Low maintenance
- Silent
- Pleasant air diffusion
- Attractive appearance
- Low energy consumption
- 0-10V control

Remote connection possible with the PinTherm Connect!

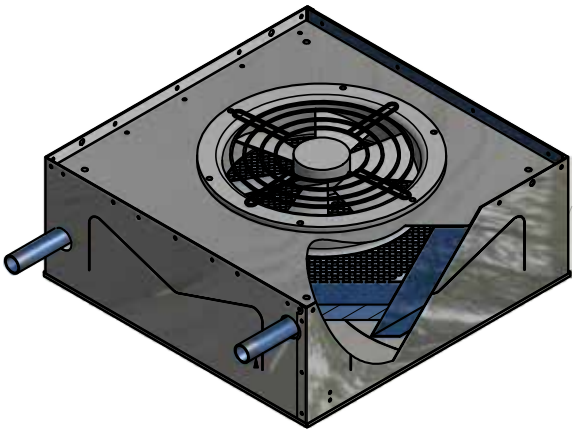

Dimensions

A	B	C	D	E	F	H
592	70	510	90	80	108	240

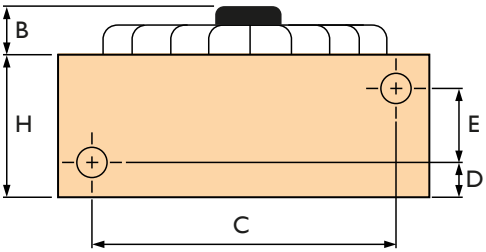

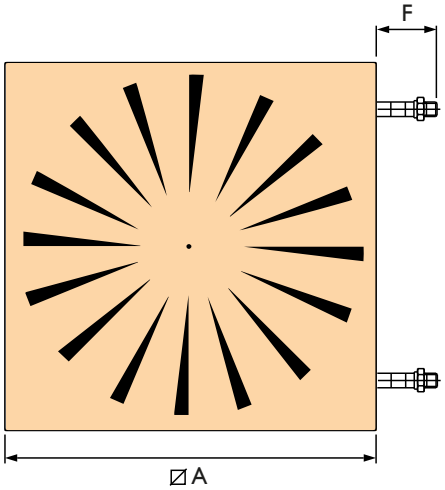

Technical information

Air displacement LDA 221	Heat delivery 90/70 T15	Heat delivery 80/60 T16	Heat delivery 60/40 T15	Heat delivery 45/38 T15	Throw	Noise level
m^3/h	*W*	*W*	*W*	*W*	*m*	*dB(A)*
500	6750	5560	3400	2720	3	26
750	8640	7290	4300	3560	4,5	31
1000	10430	8580	5040	4100	6	33
1250	11950	9910	5690	4872	8	33
1500	13520	11110	6480	5270	9,5	35
1750	14700	12180	6950	5850	11	36
2000	15910	13120	7540	6260	13	42

- Water connection: 1" male thread
- Water resistance T15: 5 kPa
- Weight: 23 kg
- 1 Phase 230 V

Assembly/location suggestions

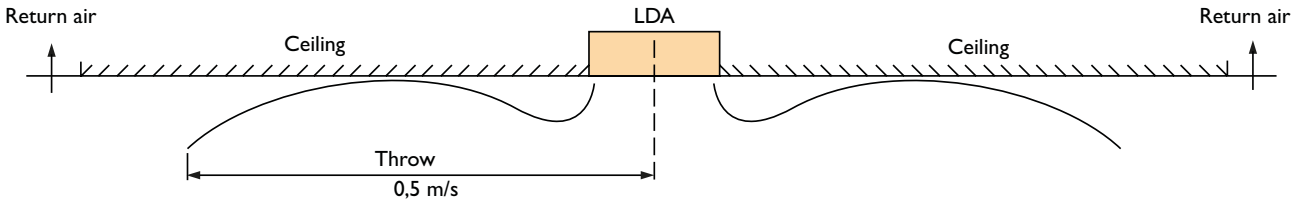

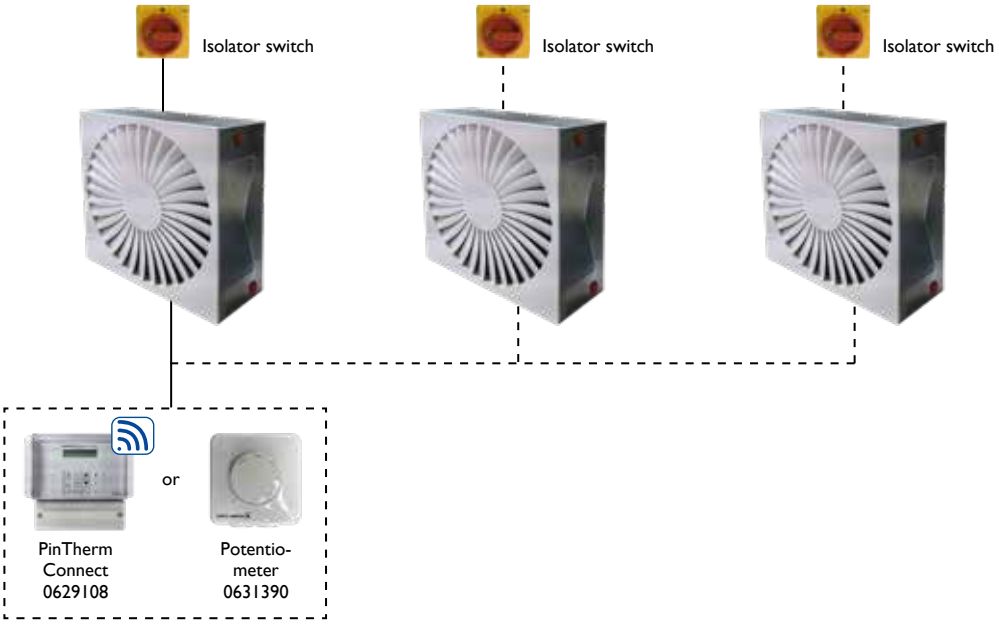

Prices Mark LDA SWIRL

PRODUCT - LDA SWIRL

Code nr.	Description	Price
3182041	LDA Swirl 221 water-supplied air heater with EC-fan	€ 1125

ACCESSORIES - CONTROL*

Code nr.	Description	Price
0631390	Potentiometer 10K with on/off contact IP54	€ 104
0629108	PinTherm Connect - programmable room thermostat with Ethernet and Modbus, 230V (4A)	€ 471
0631163	Isolator switch 4-poles 230V, separate delivery	€ 64

* On demand
For function explanations see chapter on control

FAN COIL

WATER-SUPPLIED AIR HEATER

High comfort with small dimensions in a modern design

The FAN COIL is a decentralized unit for low temperature heating systems and cooling. The unit is equipped with a low-noise EC fan and can easily be combined with a heat pump system.
The FAN COIL unit has a very low water content and can therefore react quickly. This ensures maximum controllability, which is the ideal basis for contemporary heating and cooling.

The FAN COIL is designed for use in smaller spaces such as offices, shops, living rooms and garages.

Characteristics
- 8 sizes and 2 versions
- Casing made of galvanized steel with a RAL 9010 coating
- Copper / aluminum heat exchanger
- Cleanable synthetic air filter type G2
- Reliable low-noise EC fan

mark®

Dimensions

T	A	B	C	Ø
030	840	400	480	1/2”
050	1040	600	680	1/2”
070	1240	800	880	1/2”
100	1640	1200	1280	3/4”

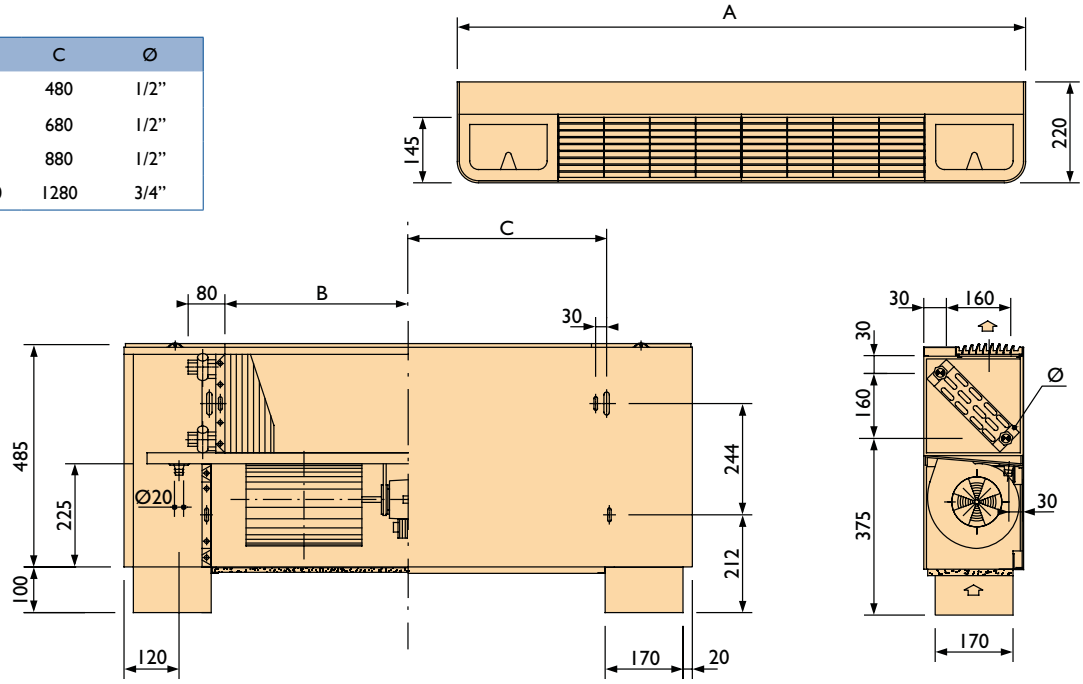

Technical information

Type		030	050	070	100	034	054	074	124
Total cooling capacity	H - kW (10V)	2,18	3,11	4,57	5,36	2,18	3,11	4,57	5,36
	M - kW (6V)	1,44	2,35	3,53	4,05	1,44	2,35	3,53	4,05
	L - kW (2V)	0,98	1,24	1,59	1,77	0,98	1,24	1,59	1,77
Sensible cooling capacity	H - kW (10V)	1,75	2,15	3,02	3,58	1,75	2,15	3,02	3,58
	M - kW (6V)	1,35	1,67	2,35	2,84	1,35	1,67	2,35	2,84
	L - kW (2V)	0,75	0,89	1,09	1,22	0,75	0,89	1,09	1,22
Water flow	l/h (10V)	374	533	783	920	374	533	783	920
Pressure drop	kPa	3,7	7,8	12,7	6,9	3,7	7,8	12,7	6,9
Heating capacity**	H - kW (10V)	3,12	4,24	6,14	7,24	1,07	1,75	2,63	2,72
	M - kW (6V)	2,34	3,24	4,71	5,44	0,87	1,41	2,13	2,16
	L - kW (2V)	1,30	1,74	2,11	2,41	0,53	0,86	1,13	1,14
Water flow**	l/h (10V)	137	186	270	318	47	77	115	120
Heating capacity**	H - kW (10V)	3,26	4,03	5,64	6,68	2,50	3,24	4,54	5,32
	M - kW (6V)	2,44	3,08	4,33	5,02	2,03	2,61	3,67	4,22
	L - kW (2V)	1,36	1,65	1,94	2,22	1,24	1,60	1,95	2,23
Water flow**	l/h (10V)	374	533	783	920	220	285	399	467
Pressure drop	kPa	3,2	7,0	11,2	6,3	7,3	13,5	21,2	8,8
Air amount	H - m^3/h (10V)	495	540	745	910	495	540	745	910
	M - m^3/h (6V)	360	390	540	620	360	390	540	620
	L - m^3/h (2V)	170	190	215	245	170	190	215	245
Sound level	dB(A) (10V)	47	48	45	48	47	48	45	48
Supply voltage	V/Ph/Hz	210-230/1/50-60							
Power consumption	W (10V)	43	44	49	55	43	44	49	55
Current consumption	A (10V)	0,28	0,30	0,34	0,37	0,28	0,30	0,34	0,37
Water connections	Nr. x “	2 x 1/2”F							
Weight	kg	24	27	39	55	25,5	28,5	41	57

H = high speed, M = medium speed, L = low speed
Water temperature cooling: 7/12°C, T=27, rh=50
* Water temperature heating: 60/40°C, T=20
** Water temperature heating: 50/43°C, T=20

Controls

Prices Mark FAN COIL

PRODUCT - FAN COIL

Code nr.	Description	Price
5991030	Fan Coil FLE 030 EC	€ 1111
5991031	Fan Coil FLE 050 EC	€ 1181
5991032	Fan Coil FLE 070 EC	€ 1414
5991033	Fan Coil FLE 100 EC	€ 1640
5991034	Fan Coil FLE 034 EC	€ 1228
5991035	Fan Coil FLE 054 EC	€ 1311
5991036	Fan Coil FLE 074 EC	€ 1573
5991037	Fan Coil FLE 124 EC	€ 1823

ACCESSORIES - CONTROL

Code nr.	Description	Price
5997350	Room thermostat with speed control	€ 270

For function explanations see chapter on control

EASYAIR

AIR CURTAIN

Keep cold and contaminated air outside

Due to its broad range, the EASYAIR water-supplied or electric air curtain can be used in any sort of open entrance, such as in shops, supermarkets, builder's merchants, offices and hospitals.
The air curtain is suitable for an installation height of up to 4.10 metres and is available in widths from 1.0 to 3.0 metres.

The use of a three-row heat exchanger means that the EASYAIR air curtain is energy efficient. The water-supplied air curtain is supplied as standard for a low water temperature of 80/60°C. The conversion table may be used for other water temperatures.
By using a thermostatic 3-way valve, the air outlet temperature of the air curtain can be kept constant.

Suitable for use in shops, offices, hospitals and factories.

Features:
- Extensive range
- Standard white finish in RAL 9010
- Simple installation
- Easy to maintain

In addition, available on request:
- EASYAIR EC with DX changer for heating and / or cooling
- EASYAIR Hybrid: combination of water-fed and electric air curtain.

EASYAIR types M and L will be standardly delivered with a speed controlled low noise EC-fan. For type LXX this is available on request. Advantages:
- The highest efficiency in case of speed control
- Up to 50% energy saving in case of partial load
- Almost completely linearly adjustable
- Long lifetime
- Low noise level
- Integrated electronic thermal protection

mark®

Dimensions

TYPE S/M/L

Lengths A (mm)
1.000
1.500
2.000
2.500
3.000

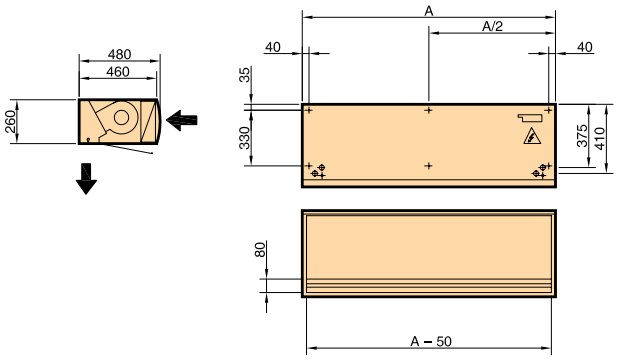

TYPE LX

Lengths A (mm)
1.000
1.500
2.000
2.500
3.000

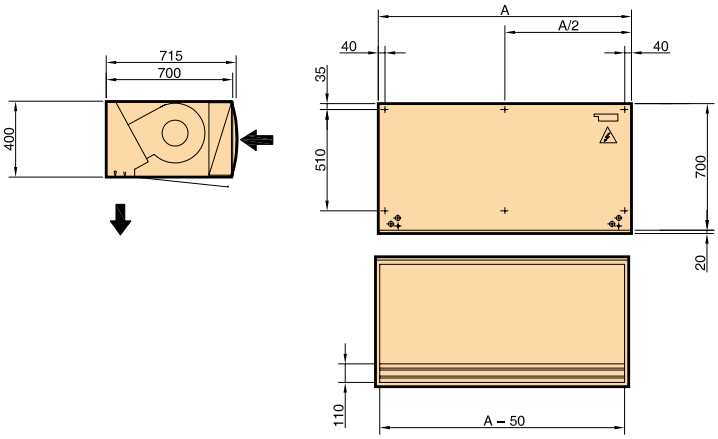

RECESSED MODEL TYPE R-S/M/L

Lengths A (mm)
950
1.150
1.450
1.750
1.950
2.350
2.450
3.000

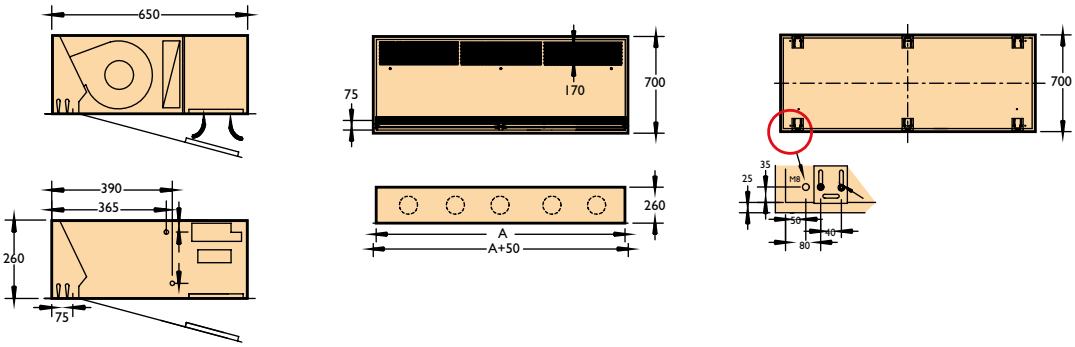

INSTALLATION KIT

Above the suspended ceiling

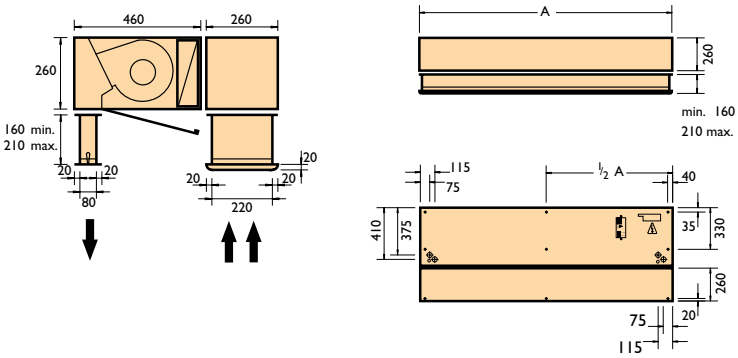

INSTALLATION KIT

Flush mounted with the suspended ceiling

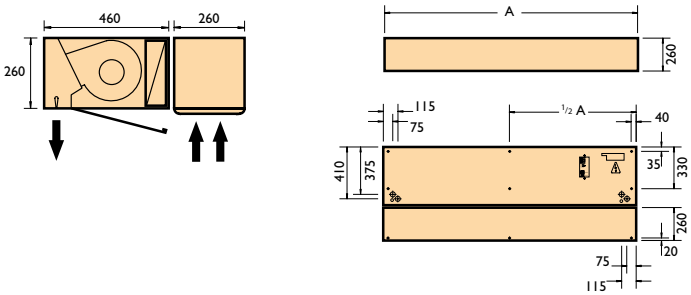

Technical information

Type	Length	Air displace-ment	Heating capacity of water 80/60 - T 20 °C	Water-side resistance water 80/60 - T 20 °C	Water connection	Connection of voltage of heating element	Electrical heating capacity	Connection voltage of fans	Nominal power	Current fan	Sound pressure	Weight
	mm	*m³/h*	*kW*	*kPa*	*Inside wire*	*V (50Hz)*	*kW*	*V (50Hz)*	*kW*	*A*	*dB(A)**	*kg*
Easyair S with AC-fan - recommended mounting height (lower side of air curtain) max. 2,4 m												
S 1000 P	1000	1200	7,5	4,68	2 x 3/4"	–	–	1 ~ 230	0,1	0,75	50	45
S 1500 P	1500	1800	11,3	3,24	2 x 3/4"	–	–	1 ~ 230	0,15	1,1	52	60
S 2000 P	2000	2400	15,1	9,00	2 x 3/4"	–	–	1 ~ 230	0,2	1,4	53	75
S 2500 P	2500	3000	18,8	4,32	2 x 3/4"	–	–	1 ~ 230	0,25	1,75	54	80
S 3000 P	3000	3600	46,4	4,30	2 x 3/4"	–	–	1 ~ 230	0,35	2,45	58	100
S 1000 E	1000	1200	–	–	–	3 ~ 400	3/6/9	1 ~ 230	0,1	0,75	50	45
S 1500 E	1500	1800	–	–	–	3 ~ 400	4/8/12	1 ~ 230	0,15	1,1	52	60
S 2000 E	2000	2400	–	–	–	3 ~ 400	6/12/18	1 ~ 230	0,2	1,4	53	75
S 2500 E	2500	3000	–	–	–	3 ~ 400	6/12/18	1 ~ 230	0,25	1,75	54	80
S 3000 E	3000	3600	–	–	–	3 ~ 400	6/12/18	1 ~ 230	0,35	2,45	58	100
Easyair M with EC-fan - recommended mounting height (lower side of air curtain) max. 2,8 m												
M 1000 P	1000	1816	11,30	5,20	2 x 3/4"	–	–	1 ~ 230	0,30	2,10	58	45
M 1500 P	1500	2724	15,70	3,60	2 x 3/4"	–	–	1 ~ 230	0,50	3,10	59	60
M 2000 P	2000	3632	22,60	10,00	2 x 3/4"	–	–	1 ~ 230	0,60	4,10	60	75
M 2500 P	2500	4540	27,60	4,80	2 x 3/4"	–	–	1 ~ 230	0,80	5,13	61	80
M 3000 P	3000	6356	61,54	15,76	2 x 3/4"	–	–	1 ~ 230	0,90	6,60	62	100
M 1000 E	1000	1816	–	–	–	3 ~ 400	3/6/9	1 ~ 230	0,30	2,10	58	45
M 1500 E	1500	2724	–	–	–	3 ~ 400	4/8/12	1 ~ 230	0,50	3,10	59	60
M 2000 E	2000	3632	–	–	–	3 ~ 400	6/12/18	1 ~ 230	0,60	4,10	60	75
M 2500 E	2500	4540	–	–	–	3 ~ 400	6/12/18	1 ~ 230	0,80	5,13	61	80
M 3000 E	3000	6356	–	–	–	3 ~ 400	10/20/30	1 ~ 230	0,90	6,60	62	100
Easyair L with EC-fan - recommended mounting height (lower side of air curtain) max. 3,2 m												
L 1000 P	1000	2724	15,50	2,27	2 x 3/4"	–	–	1 ~ 230	0,50	3,10	60	50
L 1500 P	1500	3632	22,60	7,30	2 x 3/4"	–	–	1 ~ 230	0,60	4,10	61	65
L 2000 P	2000	5448	33,50	5,50	2 x 3/4"	–	–	1 ~ 230	0,90	6,15	62	80
L 2500 P	2500	6356	39,60	7,50	2 x 3/4"	–	–	1 ~ 230	1,10	7,20	63	105
L 3000 P	3000	7264	67,13	18,53	2 x 3/4"	–	–	1 ~ 230	1,20	8,20	64	125
L 1000 E	1000	2724	–	–	–	3 ~ 400	5/10/15	1 ~ 230	0,50	3,10	60	50
L 1500 E	1500	3632	–	–	–	3 ~ 400	7,5/15/22,5	1 ~ 230	0,60	4,10	61	80
L 2000 E	2000	5448	–	–	–	3 ~ 400	10/20/30	1 ~ 230	0,90	6,15	62	110
L 2500 E	2500	6356	–	–	–	3 ~ 400	10,7/21,4/32	1 ~ 230	1,10	7,20	63	142
L 3000 E	3000	7264	–	–	–	3 ~ 400	10,7/21,4/32	1 ~ 230	1,20	8,20	64	172
Easyair LXX with AC-fan - recommended mounting height (lower side of air curtain) max. 4,1 m												
LXX 1000 P	1000	4700	26,10	15,45	2 x 1¼"	–	–	1 ~ 230	1,40	6,10	63	100
LXX 1500 P	1500	7100	41,00	17,54	2 x 1¼"	–	–	1 ~ 230	2,10	9,10	64	130
LXX 2000 P	2000	9400	55,80	18,36	2 x 1¼"	–	–	1 ~ 230	2,80	12,10	65	180
LXX 2500 P	2500	11800	70,30	18,71	2 x 1¼"	–	–	1 ~ 230	3,50	15,20	66	210
LXX 3000 P	3000	14200	128,19	19,95	2 x 1¼"	–	–	1 ~ 230	4,10	18,20	68	250

* Measured at 3m.

Conversion table

Tª Water °C	Tª Air + 15°C	Tª Air +18°C	Tª Air +20°C
100/80	1,56	1,49	1,44
90/70	1,34	1,26	1,22
80/60	1,11	1,05	1
70/50	0,89	0,82	0,78
60/40	0,67	0,61	0,56
55/35	0,56	0,5	0,45

Accessories – additional sections

Connecting cable between controller and air curtain

GLT - Module (DDC/ MODBUS)

Door contact

Ceiling fixing set

Assembly/location suggestions

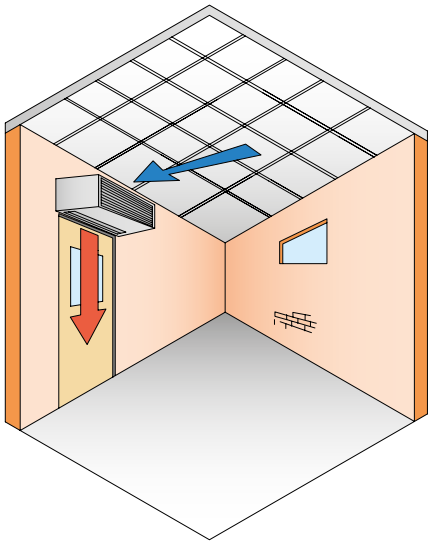

Controls

EASYAIR P (hot water air curtain) (AC / EC) or EASYAIR E (electrically heated air curtain) (AC /EC)

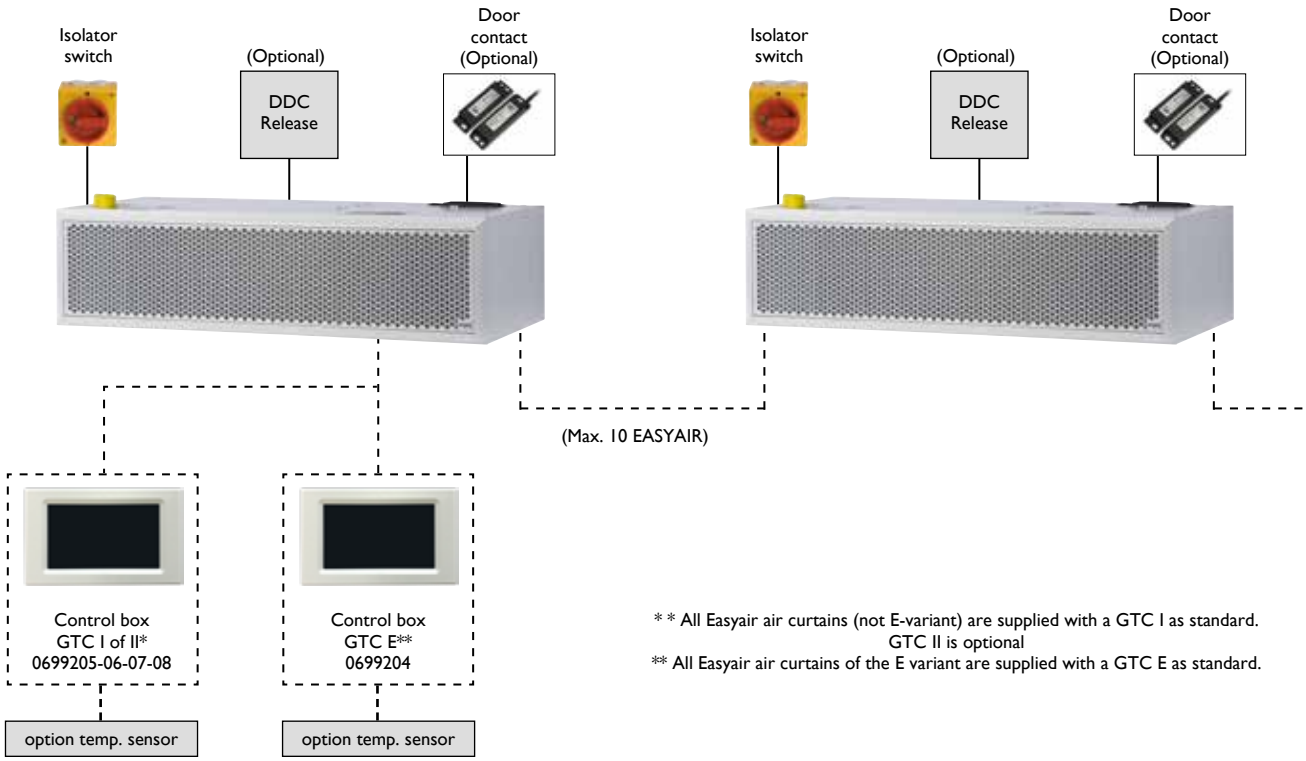

* * All Easyair air curtains (not E-variant) are supplied with a GTC I as standard.
GTC II is optional
** All Easyair air curtains of the E variant are supplied with a GTC E as standard.

EASYAIR P (hot water air curtain) or EASYAIR E (electrically heated air curtain) (AC / EC)

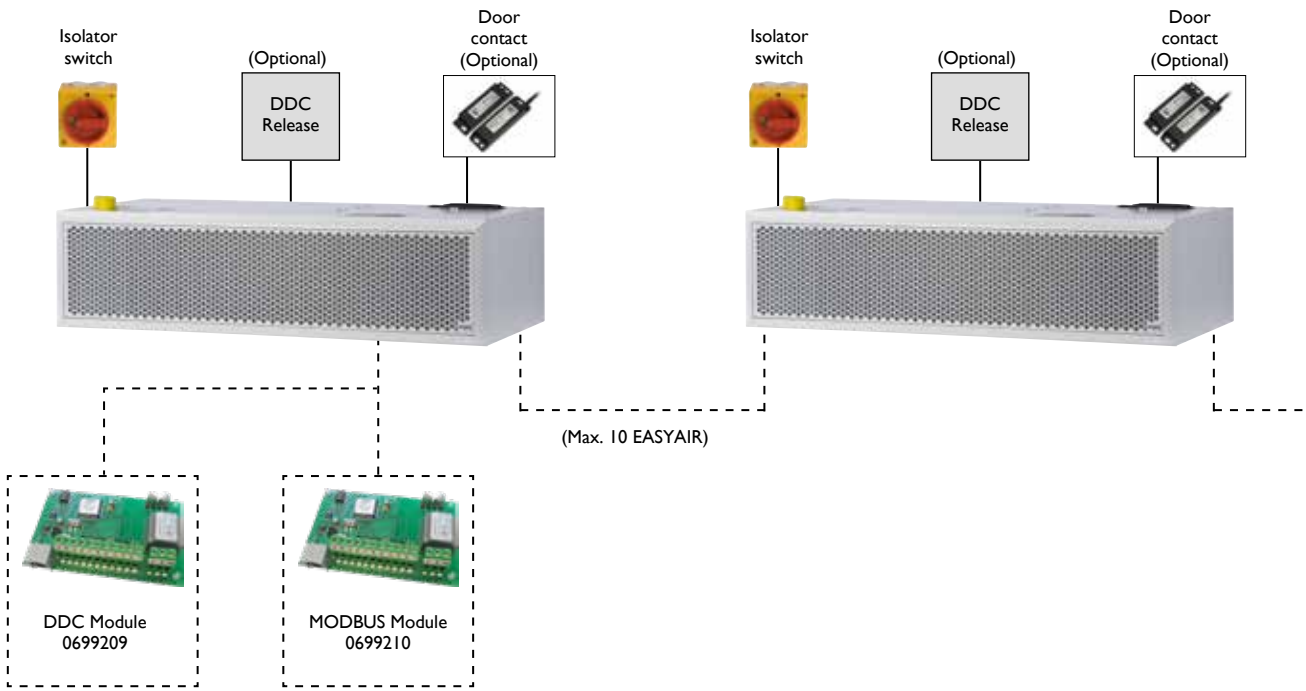

Prices Mark EASYAIR

PRODUCT - AIR CURTAIN EASYAIR S WITH AC-FAN - MAX. MOUNTING HEIGHT 2,4 M**

Code nr.	Description	Price
5992300	Easyair S1000 P, nominal power 10,17 kW	€ 1803
5992301	Easyair S1500 P, nominal power 14,13 kW	€ 2347
5992302	Easyair S2000 P, nominal power 20,34 kW	€ 2819
5992303	Easyair S2500 P, nominal power 24,84 kW	€ 3694
5992304	Easyair S3000 P, nominal power 26,02 kW	€ 4952
5992305	Easyair S1000 E, nominal power 3 / 6 / 9 kW	€ 2820
5992306	Easyair S1500 E, nominal power 4 / 8 / 12 kW	€ 3364
5992307	Easyair S2000 E, nominal power 6 / 12 / 18 kW	€ 3758
5992308	Easyair S2500 E, nominal power 6 / 12 / 18 kW	€ 4878
5992309	Easyair S3000 E, nominal power 6 / 12 / 18 kW	€ 5153

PRODUCT - AIR CURTAIN EASYAIR M WITH EC-FAN - MAX. MOUNTING HEIGHT 2,8 M**

Code nr.	Description	Price
5992310	Easyair M1000 P, nominal power 11,3 kW	€ 2005
5992311	Easyair M1500 P, nominal power 15,7 kW	€ 2694
5992312	Easyair M2000 P, nominal power 22,6 kW	€ 3210
5992313	Easyair M2500 P, nominal power 27,6 kW	€ 4028
5992314	Easyair M3000 P, nominal power 29,7 kW	€ 5080
5992315	Easyair M1000 E, nominal power 3 / 6 / 9 kW	€ 2985
5992316	Easyair M1500 E, nominal power 4 / 8 / 12 kW	€ 3685
5992317	Easyair M2000 E, nominal power 6 / 12 / 18 kW	€ 4253
5992318	Easyair M2500 E, nominal power 6 / 12 / 18 kW	€ 5169
5992319	Easyair M3000 E, nominal power 10 / 20 / 30 kW	€ 5459

PRODUCT - AIR CURTAIN EASYAIR L WITH EC-FAN - MAX. MOUNTING HEIGHT 3,2 M**

Code nr.	Description	Price
5992320	Easyair L1000 P, nominal power 15,5 kW	€ 2326
5992321	Easyair L1500 P, nominal power 22,6 kW	€ 2838
5992322	Easyair L2000 P, nominal power 33,5 kW	€ 3787
5992323	Easyair L2500 P, nominal power 39,6 kW	€ 4406
5992324	Easyair L3000 P, nominal power 34,0 kW	€ 5415
5992325	Easyair L1000 E, nominal power 5 / 10 / 15 kW	€ 3175
5992326	Easyair L1500 E, nominal power 7,5 / 15 / 22,5 kW	€ 3844
5992327	Easyair L2000 E, nominal power 10 / 20 / 30 kW	€ 4756
5992328	Easyair L2500 E, nominal power 10,7 / 21,4 / 32 kW	€ 5619
5992329	Easyair L3000 E, nominal power 10,7 / 21,4 / 32 kW	€ 6347

PRODUCT - AIR CURTAIN EASYAIR LXX WITH AC-FAN - MAX. MOUNTING HEIGHT 4,1 M**

Code nr.	Description	Price
5992340	Easyair LXX1000 P, nominal power 26,1 kW	€ 4816
5992341	Easyair LXX1500 P, nominal power 41,0 kW	€ 5905
5992342	Easyair LXX2000 P, nominal power 55,8 kW	€ 7256
5992343	Easyair LXX2500 P, nominal power 70,3 kW	€ 8778
5992344	Easyair LXX3000 P, nominal power 67,0 kW	€ 9657

The Easyair LXX is optionally available with EC-fan against additional costs.

PRODUCT - RECESSED AIR CURTAIN EASYAIR R-S WITH AC-FAN - MAX. MOUNTING HEIGHT 2,4 M**

Code nr.	Description	Price
5992400	Easyair R-S1000 P, nominal power 7,5 kW	€ 2667
5992401	Easyair R-S1500 P, nominal power 11,3 kW	€ 3217
5992402	Easyair R-S2000 P, nominal power 15,1 kW	€ 3724
5992403	Easyair R-S2500 P, nominal power 18,8 kW	€ 4736

PRODUCT - RECESSED AIR CURTAIN EASYAIR R-M WITH EC-FAN - MAX. MOUNTING HEIGHT 2,8 M**

Code nr.	Description	Price
5992410	Easyair R-M1000 P, nominal power 11,3 kW	€ 2832
5992411	Easyair R-M1500 P, nominal power 15,7 kW	€ 3263
5992412	Easyair R-M2000 P, nominal power 22,6 kW	€ 3784
5992413	Easyair R-M2500 P, nominal power 27,6 kW	€ 4810

PRODUCT - RECESSED AIR CURTAIN EASYAIR R-L WITH EC-FAN - MAX. MOUNTING HEIGHT 3,2 M**

Code nr.	Description	Price
5992420	Easyair R-L1000 P, nominal power 15,5 kW	€ 3019
5992421	Easyair R-L1500 P, nominal power 22,6 kW	€ 3468
5992422	Easyair R-L2000 P, nominal power 33,5 kW	€ 4203
5992423	Easyair R-L2500 P, nominal power 34,0 kW	€ 5159

ACCESSORIES - INSTALLATION KITS FOR SUSPENDED CEILING

Code nr.	Description	Price
5992250	Easyair S/M/L installation kit for above suspended ceiling, L=1,0m	€ 682
5992251	Easyair S/M/L installation kit for above suspended ceiling, L=1,5m	€ 828
5992252	Easyair S/M/L installation kit for above suspended ceiling, L=2,0m	€ 987
5992253	Easyair S/M/L installation kit for above suspended ceiling, L=2,5m	€ 1100
5992255	Easyair S/M/L installation kit for flush mounting with suspended ceiling, L=1,0m	€ 243
5992256	Easyair S/M/L installation kit for flush mounting with suspended ceiling, L=1,5m	€ 297
5992257	Easyair S/M/L installation kit for flush mounting with suspended ceiling, L=2,0m	€ 347
5992258	Easyair S/M/L installation kit for flush mounting with suspended ceiling, L=2,5m	€ 392
5992260	Easyair LXX installation kit for above suspended ceiling, L=1,0m	€ 1319
5992261	Easyair LXX installation kit for above suspended ceiling, L=1,5m	€ 1514
5992262	Easyair LXX installation kit for above suspended ceiling, L=2,0m	€ 1739
5992263	Easyair LXX installation kit for above suspended ceiling, L=2,5m	€ 1894
5992265	Easyair LXX installation kit for flush mounting with suspended ceiling, L=1,0m	€ 463
5992266	Easyair LXX installation kit for flush mounting with suspended ceiling, L=1,5m	€ 652
5992267	Easyair LXX installation kit for flush mounting with suspended ceiling, L=2,0m	€ 851
5992268	Easyair LXX installation kit for flush mounting with suspended ceiling, L=2,5m	€ 925

ACCESSORIES - CONTROL

Code nr.	Description	Price
0699104	Frost thermostat separate delivery	€ 68
0699105	Frost thermostat assembled	€ 354
0699102	Door contact only in combination with 0699204 to 208	€ 108
0699204	GTC E controller including room sensor	€ 404
0699205	GTC 1 controller including room sensor	€ 404
0699206	Control panel GTC 2 (with weekly timer)	€ 530
0699207	Control panel GTC 2 incl. fan, transformer etc, loose	€ 1030
0699208	Control panel GTC 2 incl. vent, trafo etc, built-in	€ 1140
0699209	DDC Modul for GBS control	€ 191
0699210	MOD BUS module	€ 318
0699211	Internal room sensor	€ 60
0699106	Isolation switch 3-poles for type P	€ 125
0699107	Isolation switch 6-poles for type E (9-15 kW)	€ 243
0699116	Isolation switch 6-poles for type E (18-22 kW)	€ 258
0699117	Isolation switch 6-poles for type E (30-32 kW)	€ 415
0699109	Data cable 20 m	€ 72
0699110	Data cable 50 m	€ 211
0699111	Data cable connector	€ 12
	For function explanations see chapter on control	

ACCESSORIES - WATER-SIDE CONTROL

Code nr.	Description	Price
0699131	3-way valve DN 20 3/4”	€ 368
0699132	3-way valve DN 25 1”	€ 428
0699133	3-way valve DN 32 1 1/4”	€ 555
0699141	Magnet valve DN 20 3/4”	€ 435
0699142	Magnet valve DN 25 1”	€ 578
0699143	Magnet valve DN 32 1 1/4”	€ 765

ACCESSORIES - ASSEMBLY

Code nr.	Description	Price
0699100	Mounting set M8-4 for type 1000/1500/200	€ 50
0699101	Mounting set M8-6 for type 2500/3000	€ 59
0699112	Ground frame for vertical positioning	€ *
0699113	Deflating for vertical positioning	€ *
0699108	Air curtain painted in RAL color by choice	€ *

REMARK

* On demand

** All Easyair air curtains are standardly delivered with a GTM II(E) speed controller

EASYAIR T200

AIR CURTAIN

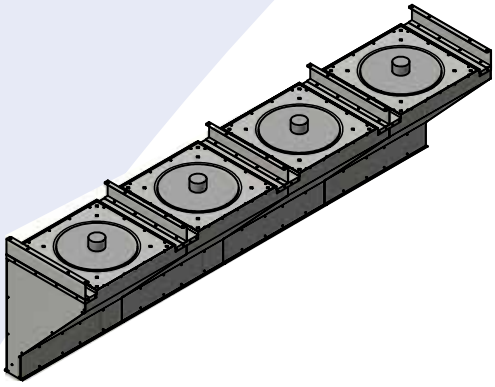

Keep cold and contaminated air outside

For industrial applications, Mark has the Easyair T200 in its product range. This industrial air curtain is available with 3, 4 or 5 fans, which can be combined to create the desired width. The air curtain is suitable for an installation height up to 8 metres.

The EASYAIR T200 blows the warm air located at the top of the room down to the occupied area. Therefore, for this type of air curtain no heat source is required. It works simple and efficiently!

In addition to the Easyair T200, there is now also the Easyair T200+. This air curtain is equipped with water-fed heat exchangers, so that the unit can also blow out hot air.

Features
- Economical
- Sharp pricing
- No maintenance required
- Speed controllable
- Low weight
- Easy installation
- Optional: vertical version
- Optional: gas-fired or water-supplied version

Optional: speed controlled low noise 1~230V EC-motor with 0-10V control.
Advantages:
- The highest efficiency in case of speed control
- Up to 50% energy saving in case of partial load
- Almost completely linearly adjustable
- Long lifetime
- Low noise level
- Integrated electronic thermal protection

Dimensions

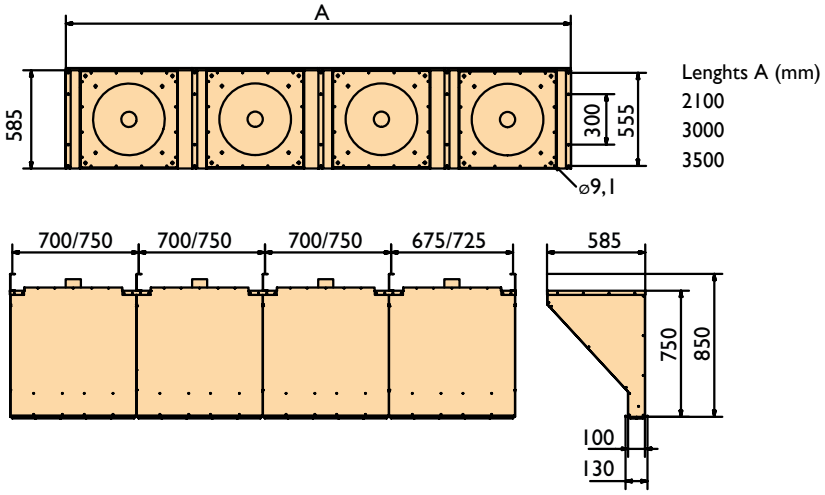

Technical information

Type	Length	Air displace-ment	Connection voltage	Current	Weight	Mounting height
	mm	*m³/h*	*V*	*A*	*kg*	*m*
T200 provided with 3 fans	2100	11200	400	2,01	93	4-8
T200 provided with 4 fans	3000	14900	400	2,68	130	4-8
T200 provided with 5 fans	3500	18650	400	3,35	153	4-8

It is possible to combine the above mentioned Easyair T200 air curtains to create the desired lenght.

Assembly/location suggestions

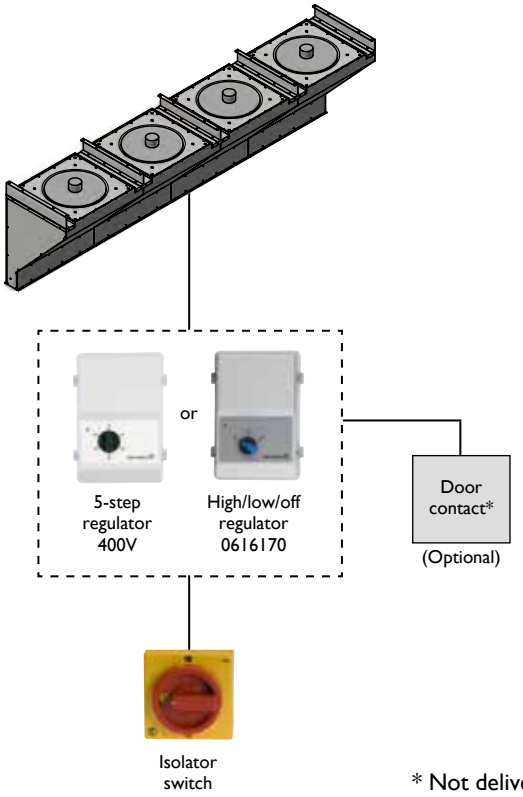

* Not delivery by Mark.

Prices Mark EASYAIR T200

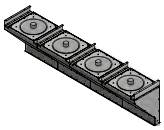

PRODUCT - INDUSTRIAL AIR CURTAIN EASYAIR T200 INCL. WIRING AND A TERMINAL BOX - MAX. MOUNTING HEIGHT 8 M

Code nr.	Description	Prijs
5063010	Easyair T200 provided with 3 fans incl. wiring and a terminal box. L=2100mm, H=750mm On/Off	€ 1465
5063011	Easyair T200 provided with 4 fans incl. wiring and a terminal box. L=3000mm, H=750mm On/Off	€ 2025
5063012	Easyair T200 provided with 5 fans incl. wiring and a terminal box. L=3500mm, H=750mm On/Off	€ 2395
5063020	Easyair T200 provided with 3 fans incl. wiring and a terminal box. L=2100mm, H=750mm High/Low	€ 1699
5063021	Easyair T200 provided with 4 fans incl. wiring and a terminal box. L=3000mm, H=750mm High/Low	€ 2213
5063022	Easyair T200 provided with 5 fans incl. wiring and a terminal box. L=3500mm, H=750mm High/Low	€ 2674

It is possible to combine the above mentioned Easyair T200 air curtains to create the desired lenght.

ACCESSORIES - CONTROL

Code nr.	Description	Price
0616162	Control box 5-steps, 400V, 2A	€ 669
0616164	Control box 5-steps, 400V, 4A	€ 935
0616166	Control box 5-steps, 400V, 7A	€ 1108
0616170	High / low / off control, 400V, 7A	€ 365
0631167	Isolator switch, separate delivery, 400V (8 poles)	€ 81

Energy efficient air curtain combined with a heat pump

Air curtains are designed to hang above an entrance and create a "thermal curtain" to separate the outside air from the cooled or heated indoor air. This can be done in a very energy-efficient manner in combination with a DX heat pump.

The EASYAIR DX air curtains are available as a free-hanging, cassette and recessed model. When installed in the ceiling, only the exhaust grid is visible.

When entering the room, the visitor immediately experiences a comfortable temperature. An additional advantage is that insects are kept out and that unpleasant odors are prevented.

The EASYAIR DX air curtain is suitable for an installation height up to 3.20 meters and is available in widths from 1.0 to 2.5 meters. The units have an operating range from -27 °C to +52 °C.

Can be used in (e.g.) shops, offices and public buildings.

Characteristics:
- Very energy efficient
- Low operating costs
- Intelligent control
- Easy operation
- Maximum comfort
- Easy installation

Dimensions

TYPE M/L

Lengths A (mm)
1.000
1.500
2.000
2.500

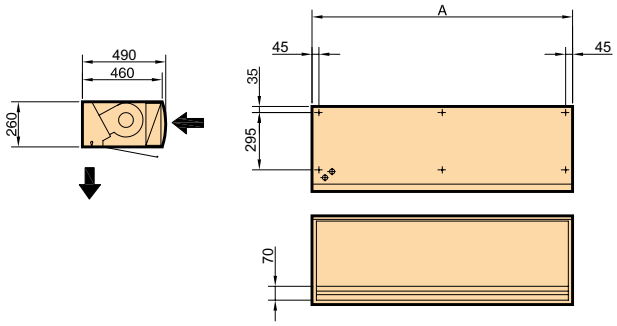

CASSETTE UNIT TYPE M/L

Lengths A (mm)
1.000
1.500
2.000
2.500

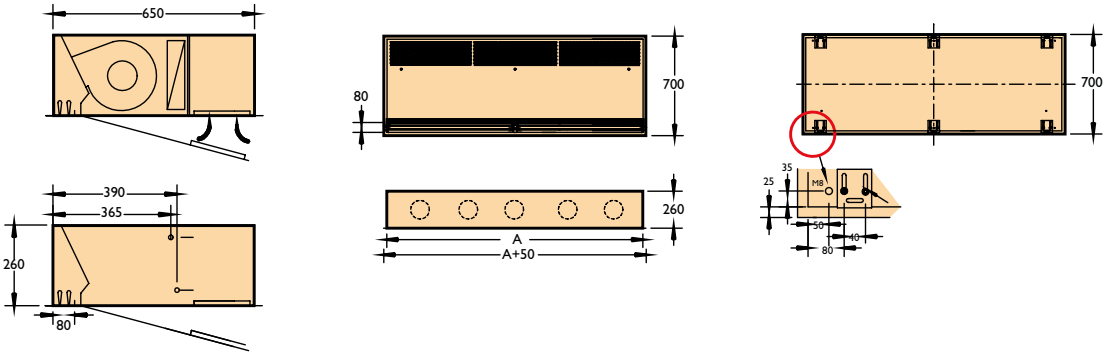

RECESSED MODEL TYPE M/L

Lengths A (mm)
1.000
1.500
2.000
2.500

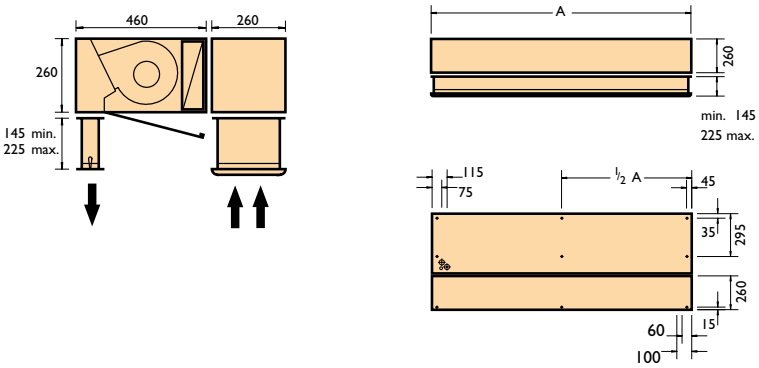

Technical information

Type		M1000	M1500	M2000	M2500	L1000	L1500	L2000	L2500
Heating capacity	kW	8,0	11,2	14,0	16,0	8,0	11,2	14,0	16,0
Air quantity	m^3/h	1.600	2.400	3.200	4.000	2.210	2.950	4.420	5.160
Power consumption	kW	0,35	0,53	0,70	0,88	0,53	0,70	1,05	1,23
Door width	mm	1000	1500	2000	2500	1000	1500	2000	2500
Max. door height	mm	3000	3000	3000	3000	3200	3200	3200	3200
Sound power	dB(A)	54	55	56	57	55	56	57	58
Weight standard air curtain	kg	48	77	101	132	51	80	107	138
Weight air curtain cassette	kg	40	95	99	120	43	98	105	126
Weight recessed air curtain	kg	71	105	129	170	74	108	135	176
DI* outdoor unit	RAV-	GM801ATP	GM801ATP	GM1101ATP	GM1101ATP	GM1401ATP	GM1401ATP	-	-
SDI* outdoor unit	RAV-	GP801AT	GP801AT	GM1101AT	GM1101AT	GM1401AT	GM1401AT	GM1601AT8	GM1601AT8

* DI (Digital Inverter) heat pumps are suitable for cooling at temperatures up to +46°C and for heating at temperatures down to -20 ° C.
SDI (Super Digital Inverter) heat pumps are suitable for cooling at temperatures up to +52°C and for heating at temperatures down to -27°C.
For techniscal information, view page 174-177.

Assembly/location suggestions

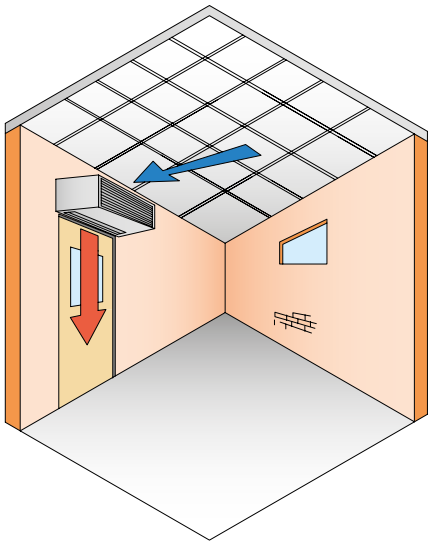

Prices Mark EASYAIR DX

PRODUCT - AIR CURTAIN EASYAIR DX - MAX. MOUNTING HEIGHT 3,2 M

Code nr.	Description	Price
5992500	Easyair DX M1000 with DI* heat pump, Heating capacity 8 kW	€ 12582
5992501	Easyair DX M1500 with DI* heat pump, Heating capacity 11,2 kW	€ 15350
5992502	Easyair DX M2000 with DI* heat pump, Heating capacity 14,0 kW	€ 17467
5992505	Easyair DX M1000 with SDI* heat pump, Heating capacity 8 kW	€ 13662
5992506	Easyair DX M1500 with SDI* heat pump, Heating capacity 11,2 kW	€ 16896
5992507	Easyair DX M2000 with SDI* heat pump, Heating capacity 14,0 kW	€ 19097
5992508	Easyair DX M2500 with SDI* heat pump, Heating capacity 16,0 kW	€ 21047
5992510	Easyair DX L1000 with DI* heat pump, Heating capacity 8 kW	€ 13250
5992511	Easyair DX L1500 with DI* heat pump, Heating capacity 11,2 kW	€ 15943
5992512	Easyair DX L2000 with DI* heat pump, Heating capacity 14,0 kW	€ 19270
5992515	Easyair DX L1000 with SDI* heat pump, Heating capacity 8 kW	€ 14331
5992516	Easyair DX L1500 with SDI* heat pump, Heating capacity 11,2 kW	€ 17489
5992517	Easyair DX L2000 with SDI* heat pump, Heating capacity 14,0 kW	€ 20900
5992518	Easyair DX L2500 with SDI* heat pump, Heating capacity 16,0 kW	€ 22613

PRODUCT - AIR CURTAIN EASYAIR DX CASSETTE UNIT - MAX. MOUNTING HEIGHT 3,2 M

Code nr.	Description	Price
5992520	Easyair DX M1000 cassette unit with DI* heat pump, Heating capacity 8 kW	€ 13058
5992521	Easyair DX M1500 cassette unit with DI* heat pump, Heating capacity 11,2 kW	€ 15447
5992522	Easyair DX M2000 cassette unit with DI* heat pump, Heating capacity 14,0 kW	€ 17659
5992525	Easyair DX M1000 cassette unit with SDI* heat pump, nominal power 8 kW	€ 14137
5992526	Easyair DX M1500 cassette unit with SDI* heat pump, nominal power 11,2 kW	€ 16995
5992527	Easyair DX M2000 cassette unit with SDI* heat pump, nominal power 14,0 kW	€ 19289
5992528	Easyair DX M2500 cassette unit with SDI* heat pump, nominal power 16,0 kW	€ 21988
5992530	Easyair DX L1000 cassette unit with DI* heat pump, nominal power 8 kW	€ 13927
5992531	Easyair DX L1500 cassette unit with DI* heat pump, nominal power 11,2 kW	€ 16308
5992532	Easyair DX L2000 cassette unit with DI* heat pump, nominal power 14,0 kW	€ 19388
5992535	Easyair DX L1000 cassette unit with SDI* heat pump, nominal power 8 kW	€ 15008
5992536	Easyair DX L1500 cassette unit with SDI* heat pump, nominal power 11,2 kW	€ 17856
5992537	Easyair DX L2000 cassette unit with SDI* heat pump, nominal power 14,0 kW	€ 21018
5992538	Easyair DX L2500 cassette unit with SDI* heat pump, nominal power 16,0 kW	€ 23702

PRODUCT - AIR CURTAIN EASYAIR DX RECESSED MODEL - MAX. MOUNTING HEIGHT 3,2 M

Code nr.	Description	Price
5992550	Easyair DX M1000 recessed model with DI* heat pump, nominal power 8 kW	€ 13602
5992551	Easyair DX M1500 recessed model with DI* heat pump, nominal power 11,2 kW	€ 16625
5992552	Easyair DX M2000 recessed model with DI* heat pump, nominal power 14,0 kW	€ 18979
5992555	Easyair DX M1000 recessed model with SDI* heat pump, nominal power 8 kW	€ 14681
5992556	Easyair DX M1500 recessed model with SDI* heat pump, nominal power 11,2 kW	€ 18173
5992557	Easyair DX M2000 recessed model with SDI* heat pump, nominal power 14,0 kW	€ 20609
5992558	Easyair DX M2500 recessed model with SDI* heat pump, nominal power 16,0 kW	€ 22700
5992560	Easyair DX L1000 recessed model with DI* heat pump, nominal power 8 kW	€ 14276
5992561	Easyair DX L1500 recessed model with DI* heat pump, nominal power 11,2 kW	€ 17221
5992562	Easyair DX L2000 recessed model with DI* heat pump, nominal power 14,0 kW	€ 20401
5992565	Easyair DX L1000 recessed model with SDI* heat pump, nominal power 8 kW	€ 15355
5992566	Easyair DX L1500 recessed model with SDI* heat pump, nominal power 11,2 kW	€ 18769
5992567	Easyair DX L2000 recessed model with SDI* heat pump, nominal power 14,0 kW	€ 22031
5992568	Easyair DX L2500 recessed model with SDI* heat pump, nominal power 16,0 kW	€ 24257

* DI (Digital Inverter) heat pumps are suitable for cooling at temperatures up to +46°C and for heating at temperatures down to -20 ° C. SDI (Super Digital Inverter) heat pumps are suitable for cooling at temperatures up to +52°C and for heating at temperatures down to -27°C.

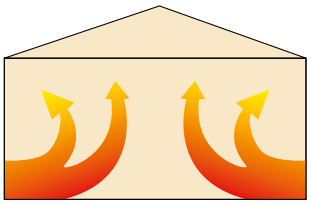

With normal heating systems, the heated air rises upwards outside the usable range.

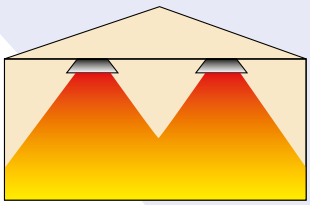

When you use INFRA heating systems, the heat remains where it is needed.

The easy way to heat halls

Mark manufactures a variety of radiant heating systems. These systems operate with various heat media. Mark offers a range of gas-fired radiant heaters and water-supplied radiant panels.

Principle of radiant heating
By using a heat medium such as, for example, warm water or hot air (flue gases), pipework can be heated. The medium is able to heat the pipework to such a degree that the pipe emits its heat in the form of radiant heat. This heat can best be compared with the sun. The radiant heat is completely harmless, and provides a very pleasant atmosphere.

If the radiant heat is used, the air in a room does not need to be heated. The room temperature (air) also remains relatively low. An example of this is that when the ambient temperature is just 18 degrees, it feels like 20 degrees.

One major benefit is that the energy requirement is reduced by up to 10% and that the system is very fast. Reducing energy requirements and having a much shorter heating time means it is possible to reduce energy consumption by approximately 40% in comparison with conventional heating.

The radiant heat ensures that the floor of the hall has a temperature higher than the desired hall temperature. Using radiant heating means that no pockets of heat form under the roof, unlike with conventional heating.
No air is blown into the hall, so that people are not affected by air displacement or dust eddies. Think, for example, of the goods on warehouse shelves, which previously always became dusty, or sports halls where the air heaters had to be switched off during games of badminton.

Radiant heating is particularly suitable for zone heating so that, for example, only a work space is heated rather than the whole room.
This unit is also suitable for poorly insulated buildings.

Application
Our systems are particularly suitable for sports halls, production facilities, aircraft hangars, showrooms and garages.

The benefits of radiant heating include
- Short warm-up time
- High floor temperature
- Silent
- No air movement
- Low energy consumption
- “Zone” heating is possible
- Heat only where needed

INFRA / INFRA MONO

GAS-FIRED RADIANT HEATER

High efficiency black tube radiant heater

Mark INFRA / INFRA MONO black tube radiant heaters heat with long-wave infrared radiation. Radiant heating is based on the principle of heat transfer from a warm object to an object of lower temperature by means of electromagnetic wave energy.
This electromagnetic wave, not hindered by air, radiates walls, floor and the people present in the room.

As soon as the infrared radiation gets in contact with the human body, it is converted into heat. This does not cause any change in the air temperature. This method of heat generation is considered very pleasant.

The more intense the radiant heat is, the less the actual air temperature has to be increased for a comfortable indoor climate. Therefore, heating with the Mark INFRA system is much more economical compared to conventional systems.

Possible applications include: sports halls, production facilities, aircraft hangars, showrooms and garages.

The benefits of radiant heating include:
- No spreading of dust and low noise level during operation
- Can be used in a focused way to enable a high energy efficiency
- A radiation efficiency of up to 75% according to EN 416-2
- A uniform heat distribution across the entire length of the radiator is achieved by the use of an overpressure burner with a long stable flame, in combination with built-in turbulators in the radiant tube
- Available in 10 different types from 10 to 100 kW
- By using a 1-stage or 2-stage control the output of the radiant heater is adapted to the required heat
- Various sizes, from 3 to 18 m length
- Highly reflective reflector hood, optional double air insulated (type +)
- The radiator with a double air-insulated reflector can be optimized energetically by using a flue gas cooler (type ++)
- The highly reflective radiation hood features integrated V-shaped reflectors and end caps
- Available in natural gas and propane
- Easy installation and maintenance

Remote connection possible with the PinTherm Infra Connect!

mark®

Dimensions

INFRA 10-3

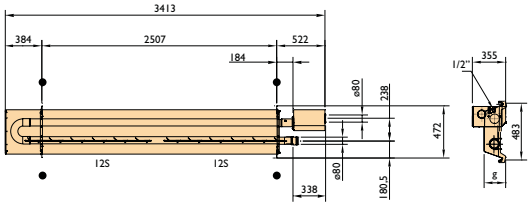

INFRA 15-5

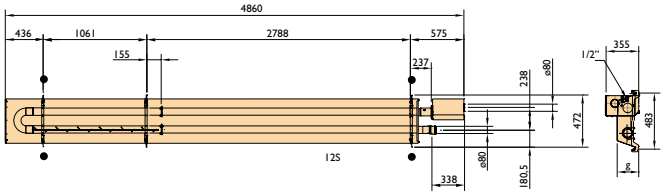

INFRA 20-6

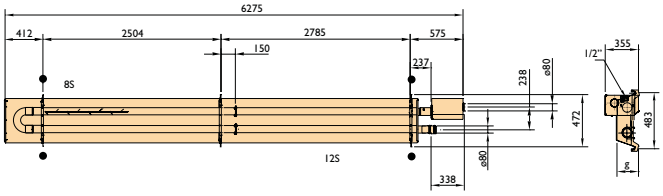

INFRA 30-6

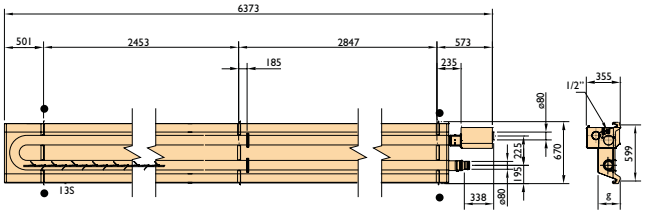

INFRA 30-9 / 40-9 / 50-9

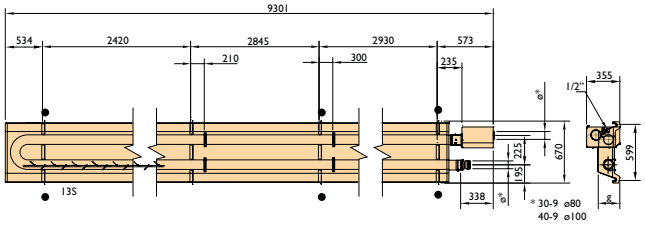

INFRA 50-12

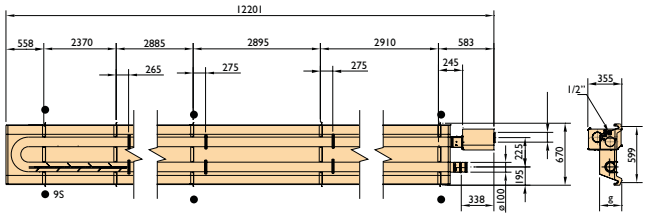

INFRA MONO 30-12

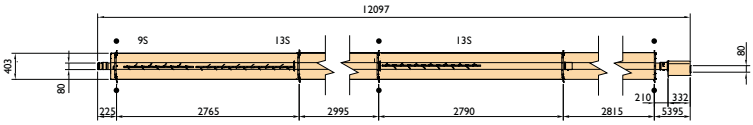

INFRA MONO 50-18

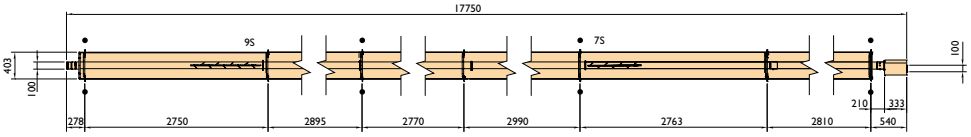

● suspension point

Technical information

Type		10-3	15-5	20-6	30-6	30-9	40-9	50-9	50-12	30-12 MONO	50-18 MONO
Nominal load (NCV)	kW	10,0	14,0	18,0	28,0	30,0	38,0	46,0	49,9	30,0	49,9
Flue efficiency (NCV)	%	91	90,7	90,6	90,0	91,7	90,5	90,0	90,3	91,7	90,3
Gas consumption G25 (15°C)	m^3/h	1,20	1,70	2,20	3,30	3,60	4,60	5,4	5,90	3,60	5,90
Gas consumption G20 (15°C)	m^3/h	1,10	1,50	1,90	2,90	3,20	3,90	4,9	5,30	3,20	5,30
Gas consumption G31 (15°C)	kg/h	0,79	1,11	1,42	2,12	2,21	2,99	3,72	3,92	2,36	3,92
Gas consumption G30 (15°C)	kg/h	0,81	1,14	1,46	2,19	2,27	3,08	3,64	4,04	2,43	4,04
Weight	kg	48 / 65*	66 / 91*	81 / 112*	97 / 136*	132 / 190*	132 / 190*	132	168 / 244*	101	143
Electrical power	W	55	57	60	60	60	63	63	63	60	63
Recommended suspension height, horizontal	m	4	4	4	5	5	5	7	7	5	7
Recommended suspension height, 30° angle	m	4	4	4	4	4	5	6	6	5	6
Burner pressure G25	mbar	16,0	16,0	16,0	16,0	16,0	16,0	16,0	16,0	16,0	16,0
Burner pressure G20	mbar	11,0	11,0	11,0	11,5	11,5	11,5	11,5	11,5	12,0	12,0
Burner pressure G31	mbar	35,1	35,1	35,1	35,1	35,1	35,1	35,1	35,1	35,1	35,1
Burner pressure G30	mbar	27,2	27,2	27,2	27,2	27,2	27,2	27,2	27,2	27,2	27,2
Sound level at 5 metres	dB(A)	41	41	42	42	42	43	43	43	42	43

* Single-/ Double-walled reflector

Accessories – flue gas exhaust

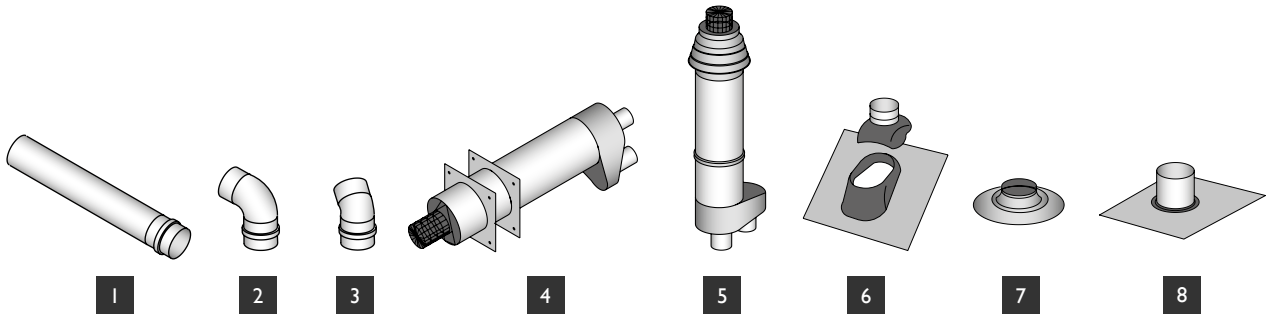

1 Extension set
2 90° elbow
3 45° elbow
4 Single flue set horizontal
5 Single flue set vertical
6 Roof flashing for pitched roof
7 Adhesive plate
8 Flexible roof flashing for cladded roof

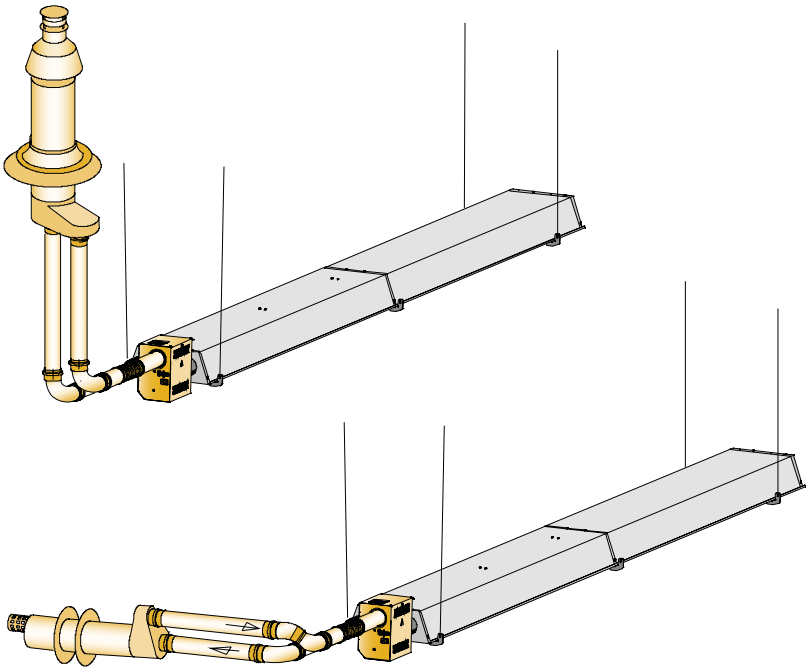

Controls

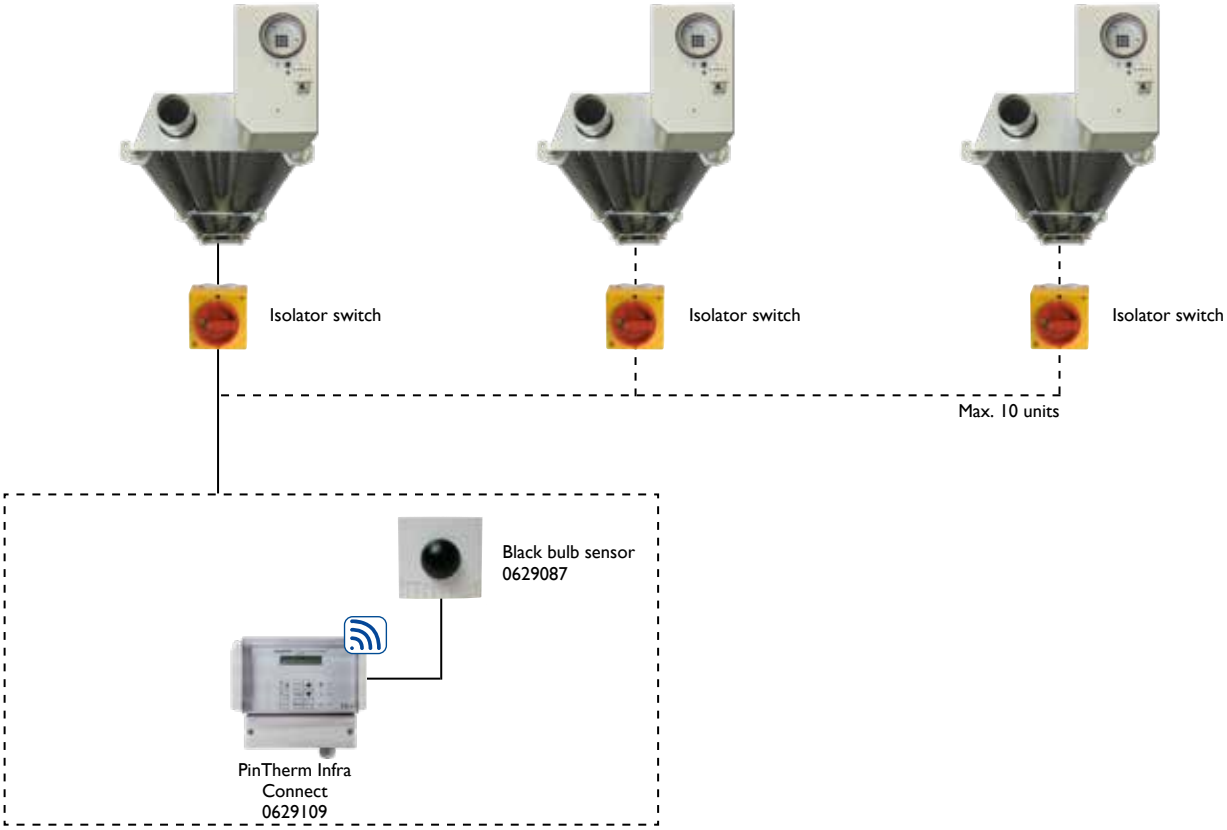

Waterproof stainless steel Infra, the perfect solution for, for example, car washes.

Zone control

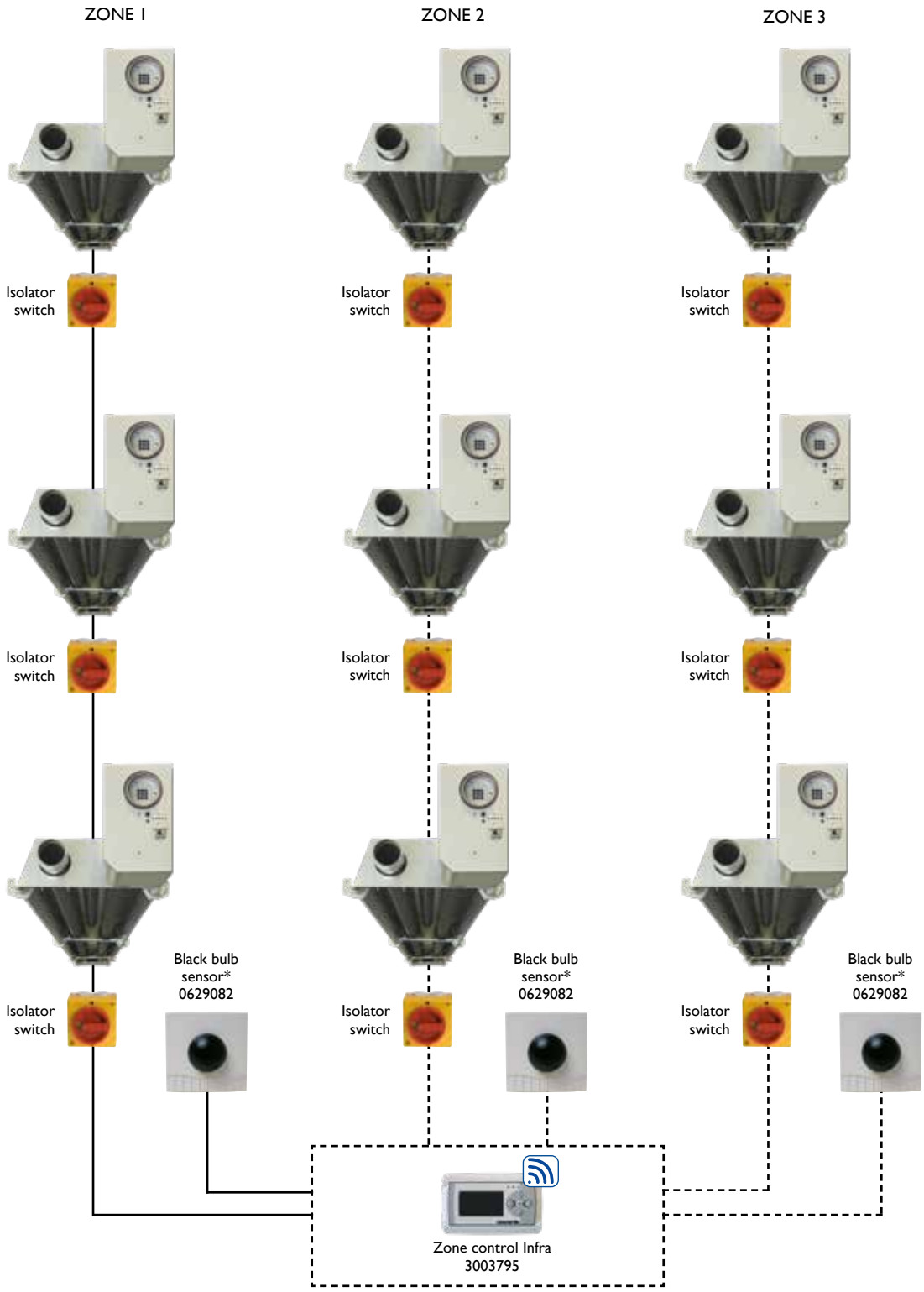

* One black bulb sensor per zone.

Prices Mark INFRA / INFRA MONO

PRODUCT - INFRA, ON/OFF BURNER, SINGLE-WALLED, NATURAL GAS G20

Code nr.	Description	Price
5033010+5025100	INFRA 10-3, nominal power 10,0 kW	€ 2091
5033016+5025106	INFRA 15-5, nominal power 14,0 kW	€ 2355
5033011+5025101	INFRA 20-6, nominal power 18,0 kW	€ 2392
5033013+5025103	INFRA 30-6, nominal power 27,0 kW	€ 3005
5033012+5025102	INFRA 30-9, nominal power 30,0 kW	€ 3308
5033014+5025104	INFRA 40-9, nominal power 38,0 kW	€ 3325
5033017+5025104	INFRA 50-9, nominal power 46,0 kW	€ 3325
5033015+5025105	INFRA 50-12, nominal power 49,9 kW	€ 3879
5033070+5025141	INFRA MONO 30-12, nominal power 30,0 kW	€ 3109
5033073+5025143	INFRA MONO 50-18, nominal power 49,9 kW	€ 3564

Other gas types available on request.

PRODUCT - INFRA, HIGH/LOW BURNER, SINGLE-WALLED, NATURAL GAS G20

Code nr.	Description	Price
5033040+5025100	INFRA 10-3, nominal power 10,0 kW	€ 2176
5033046+5025106	INFRA 15-5, nominal power 14,0 kW	€ 2439
5033041+5025101	INFRA 20-6, nominal power 18,0 kW	€ 2476
5033043+5025103	INFRA 30-6, nominal power 27,0 kW	€ 3090
5033042+5025102	INFRA 30-9, nominal power 30,0 kW	€ 3393
5033044+5025104	INFRA 40-9, nominal power 38,0 kW	€ 3410
5033047+5025104	INFRA 50-9, nominal power 46,0 kW	€ 3408
5033045+5025105	INFRA 50-12, nominal power 49,9 kW	€ 3962
5033075+5025141	INFRA MONO 30-12, nominal power 30,0 kW	€ 3179
5033078+5025143	INFRA MONO 50-18, nominal power 49,9 kW	€ 3636

Other gas types available on request.

PRODUCT - INFRA, ON/OFF BURNER, DOUBLE-WALLED, NATURAL GAS G20

Code nr.	Description	Price
5033010+5025110	INFRA 10-3, nominal power 10,0 kW	€ 2266
5033016+5025116	INFRA 15-5, nominal power 14,0 kW	€ 2618
5033011+5025111	INFRA 20-6, nominal power 18,0 kW	€ 2778
5033013+5025113	INFRA 30-6, nominal power 27,0 kW	€ 3583
5033012+5025112	INFRA 30-9, nominal power 30,0 kW	€ 4139
5033014+5025114	INFRA 40-9, nominal power 38,0 kW	€ 4155
5033017+5025114	INFRA 50-9, nominal power 46,0 kW	€ 4155
5033015+5025115	INFRA 50-12, nominal power 49,9 kW	€ 4663

Other gas types available on request.

PRODUCT - INFRA, HIGH/LOW BURNER, DOUBLE-WALLED, NATURAL GAS G20

Code nr.	Description	Price
5033040+5025110	INFRA 10-3, nominal power 10,0 kW	€ 2351
5033046+5025116	INFRA 15-5, nominal power 14,0 kW	€ 2702
5033041+5025111	INFRA 20-6, nominal power 18,0 kW	€ 2862
5033043+5025113	INFRA 30-6, nominal power 27,0 kW	€ 3668
5033042+5025112	INFRA 30-9, nominal power 30,0 kW	€ 4224
5033044+5025114	INFRA 40-9, nominal power 38,0 kW	€ 4240
5033047+5025114	INFRA 50-9, nominal power 46,0 kW	€ 4238
5033045+5025115	INFRA 50-12, nominal power 49,9 kW	€ 4746

Other gas types available on request.

PRODUCT - STAINLESS STEEL INFRA, ON/OFF BURNER, SINGLE-WALLED, NATURAL GAS G20, WATERPROOF STAINLESS STEEL VERSION FOR HUMID ROOMS

Code nr.	Description	Price
5033110+5025200	Stainless steel INFRA10-3, nominal power 10,0 kW	€ 5239
5033116+5025206	Stainless steel INFRA 15-5, nominal power 14,0 kW	€ 5814
5033111+5025201	Stainless steel INFRA 20-6, nominal power 18,0 kW	€ 5925
5033113+5025203	Stainless steel INFRA 30-6, nominal power 27,0 kW	€ 7061
5033112+5025202	Stainless steel INFRA 30-9, nominal power 30,0 kW	€ 7905
5033114+5025204	Stainless steel INFRA 40-9, nominal power 38,0 kW	€ 8073
5033117+5025204	Stainless steel INFRA 50-9, nominal power 46,0 kW	€ 8073
5033115+5025205	Stainless steel INFRA 50-12, nominal power 49,9 kW	€ 9010

Other gas types available on request.

PRODUCT - STAINLESS STEEL INFRA, HIGH/LOW BURNER, SINGLE-WALLED, NATURAL GAS G20, WATERPROOF STAINLESS STEEL VERSION FOR HUMID ROOMS

Code nr.	Description	Price
5033140+5025200	Stainless steel INFRA 10-3, nominal power 10,0 kW	€ 5323
5033146+5025206	Stainless steel INFRA 15-5, nominal power 14,0 kW	€ 5898
5033141+5025201	Stainless steel INFRA 20-6, nominal power 18,0 kW	€ 6012
5033143+5025203	Stainless steel INFRA 30-6, nominal power 27,0 kW	€ 7148
5033142+5025202	Stainless steel INFRA 30-9, nominal power 30,0 kW	€ 7990
5033144+5025204	Stainless steel INFRA 40-9, nominal power 38,0 kW	€ 8160
5033147+5025204	Stainless steel INFRA 50-9, nominal power 46,0 kW	€ 8160
5033145+5025205	Stainless steel INFRA 50-12, nominal power 49,9 kW	€ 9097

Other gas types available on request.

ACCESSOR1ES - FLUE FAN

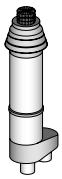

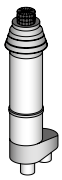

Code nr.	Description	Price
	INFRA 10-3 / 15-5 / 20-6 / 30-6 / 30-9 / MONO 30-12	
5990556	Single flue set vertical, ø 80mm. External diameter 130mm	€ 161
5990579	Single pipe horizontal, ø 80mm. External diameter 130mm	€ 104
5990727	Set ALU pipes ø 80mm, length 500 mm	€ 60
5990732	Set ALU pipes ø 80mm, length 1000 mm	€ 67
5990733	Set ALU elbows 90°, ø 80mm (2 pieces)	€ 47
5990734	Set ALU elbows 45°, ø 80mm (2 pieces)	€ 65
5017656	Reducer kit 2 x from ø 80 to ø 100 / 2x from ø 100 to ø 80	€ 107
0540927	Roof flashing, only in combination with 5990556	€ 33
3040927	Adhesive coated roof flashing for plastic roofing, only in combination with 5990556	€ 61
0540804	Roof flashing 20 to 35°, only in combination with 5990556	€ 52
0540807	Dektite 4”-7”	€ 108
0540820	Dektite 5”-9”	€ 161
5990520	Flue gas cooler ø 80	€ 157
5018047	Flexible connection ø 80 intake side	€ 102
	INFRA 40-9 / 50-9 / 50-12 / MONO 50-18	
5990560	Single flue set vertical, ø 100mm. External diameter 160mm	€ 290
5990583	Single pipe horizontal, ø 100mm. External diameter 160mm***	€ 199
5990728	Set ALU pipes ø 100mm, length 500 mm	€ 72
5990736	Set ALU pipes ø 100mm, length 1000 mm	€ 96
5990737	Set ALU elbows 90°, ø 100mm (2 pieces)	€ 65
5990738	Set ALU elbows 45°, ø 100mm (2 pieces)	€ 58
5017657	Reducer kit 2 x from ø 100 to ø 130 / 2x from ø 130 to ø 100	€ 117
0540929	Roof flashing, only in combination with 5990560	€ 35
3040929	Adhesive coated roof flashing for plastic roofing, only in combination with 5990560	€ 83
0540806	Roof flashing 20 to 35°, only in combination with 5990560	€ 80
0540807	Dektite 4”-7”	€ 108
0540820	Dektite 5”-9”	€ 161
5990521	Flue gas cooler ø 100	€ 206
5018057	Flexible connection ø 100 intake side	€ 115
5990744	Set ALU pipes ø 130mm, length 1000 mm	€ 161
5990741	Set ALU elbows 90°, ø 130mm (2 pieces)	€ 234
5990742	Set ALU elbows 45°, ø 130mm (2 pieces)	€ 175
3199749	Box downdraught diverter ø 130mm	€ 86

ACCESSORIES - CONTROLS

Code nr.	Description	Price
0629109	PinTherm Infra Connect – programmable thermostat with Ethernet and Modbus, 230V (4A) *	€ 459
3003795	Zone control Infra****	€ 1648
0629087	External black bulb sensor for 0629109	€ 124
0629082	External black bulb sensor RSTF PT1000 for 3003795	€ 108
0631162	Isolator switch, separate delivery, 230V (2 poles)	€ 56
0631163	Isolator switch, separate delivery, 230V (4 poles)**	€ 64

Control boxes on request
For function explanation see chapter on control

ACCESSORIES - ASSEMBLY

Code nr.	Description	Price
3187210	Set wall mounting brackets INFRA 10-3 / 15-5 / 20-6 / 30-6	€ 211
3187212	Set wall mounting brackets INFRA 30-9 / 40-9 / 50-9 / 50-12 / INFRA MONO 30-12	€ 258
3187214	Set wall mounting brackets INFRA MONO 50-18	€ 320
1999053	Wire rope suspension set suitable for mounting to a roof beam. Cable length up to 3m.	€ 26
1999055	Wire rope suspension set suitable for mounting on concrete/wooden roof. Cable length up to 3m.	€ 26
1999057	Wire rope suspension set suitable for mounting on sheet piling roof. Cable length up to 3m.	€ 26

Ball guard on demand

ACCESSORIES

Code nr.	Description	Price
5018020	Flexible hose 3/4" - 1/2"	€ 131

REMARKS

* Also order 0629087
** Only select when unit is high/low
*** Not applicable for INFRA MONO
**** Also order 0629082 (one for each zone)

INFRA LINE

GAS-FIRED RADIANT HEATER

Heat only where needed

The Mark INFRA LINE offers the option of heating without displacing air. In addition, heat reaches only the location where it is required. The short warming-up period and the lower room temperature can yield good energy savings. Savings can be as high as 40%.

The aluminium reflective hood radiates the radiant heat emitted downwards. This hood is standardly insulated to increase radiation efficiency.

Mark supplies the INFRA LINE in 7 different capacities with the length of the unit increasing as the capacity increases.

Possible applications include: sports halls, production facilities, aircraft hangars, showrooms and garages.

The benefits of radiant heating include:
- Short warm-up time
- High floor temperature
- Silent
- No air movement
- Low energy consumption
- "Zone" heating
- Heat only where needed
- Efficiency 93%

Remote connection possible with the PinTherm Infra Connect!

Dimensions

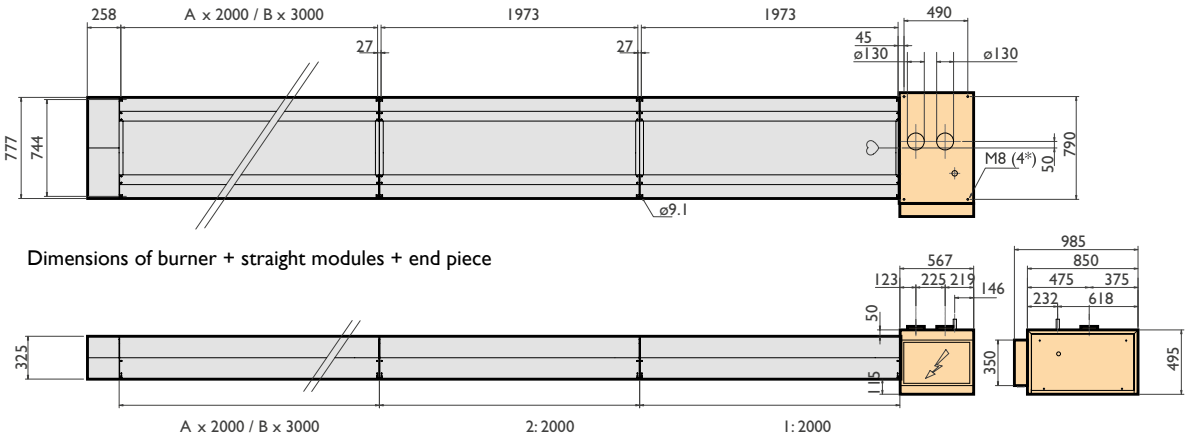

Dimensions of burner + straight modules + end piece

A/B = number of straight modules

Technical information

Type		50/30	70/30	70/36	80/40	90/44	100/50	100-70/50 H/L	80/40 TWIN	100/50 TWIN
Maximum length	m	31	51	51	51	61	71	51	127	147
Minimum length	m	26	30	36	40	44	50	50	80	100
Nominal power	kW	50	70	70	80	90	99,5	99,5/70	160	200
Nominal load (lower value)	kW	55	74,9	74,9	85,6	97,2	107,5	107,5/74,9	171,2	215
Gas consumption G25 (15°C)	m^3/h	6,8	9,2	9,2	10,5	11,9	13,2	13,2/9,2	21	26,4
Gas consumption G20 (15°C)	m^3/h	5,8	7,9	7,9	9,1	10,3	11,4	11,4/7,9	18,2	22,8
Gas consumption G31 (15°C)	m^3/h	2,3	3,1	3,1	3,5	1,0	1,1	4,4/3,1	7	2,2
Gas consumption G30 (15°C)	m^3/h	1,6	2,3	2,3	2,7	3,0	3,3	3,3/2,3	5,4	6,6
Minimum weight	kg	516	516	596	644	708	788	792	1288	1576
Electrical power	kW	0,7	0,7	0,7	0,7	0,7	0,7	0,7	1,4	1,4
Minimum suspension height	m	4,5	4,5	4,5	5,0	5,0	5,0	5,0	5,0	5,0
Noise level at 5 m	dB(A)	48	48	48	48	48	48	48	50	50

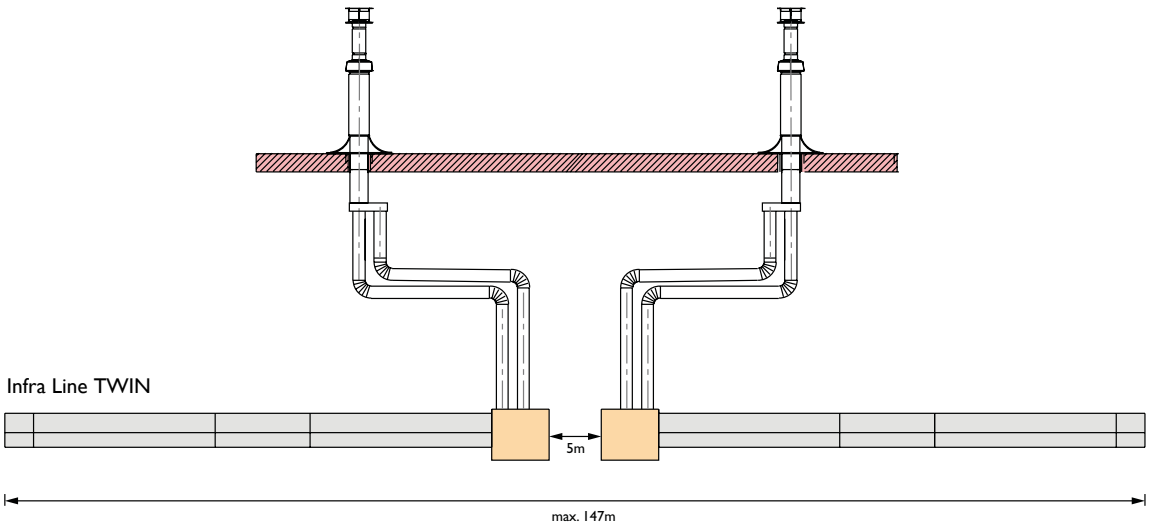

Accessories – flue gas exhaust

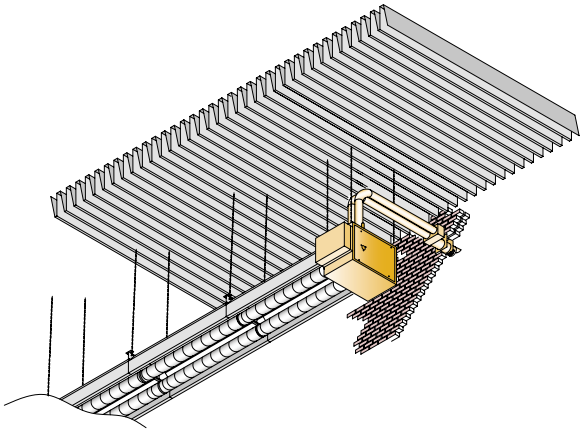

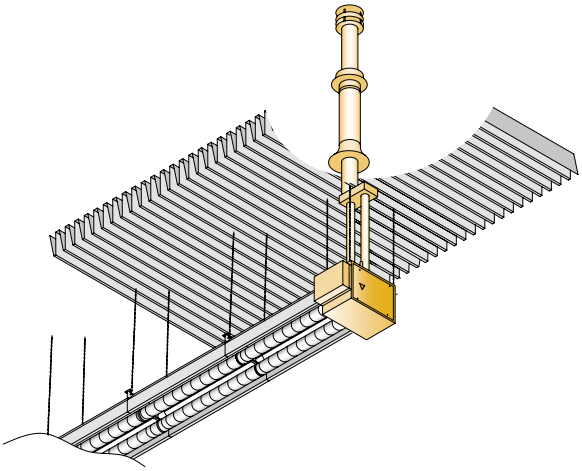

Option: burner outside the wall

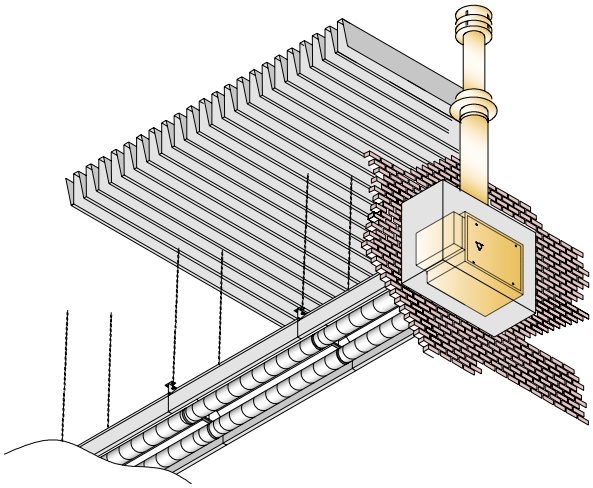

Assembly/location suggestions

Cross bars
(not included)

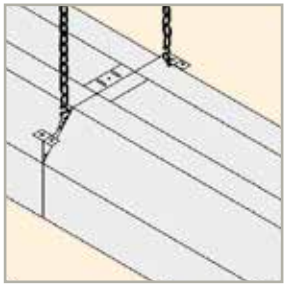

Chains
(not included)

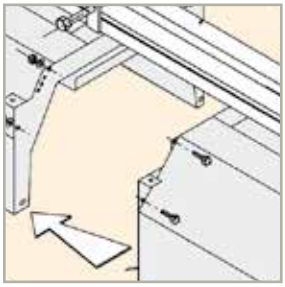

Suspension rail
(optional)

Project design

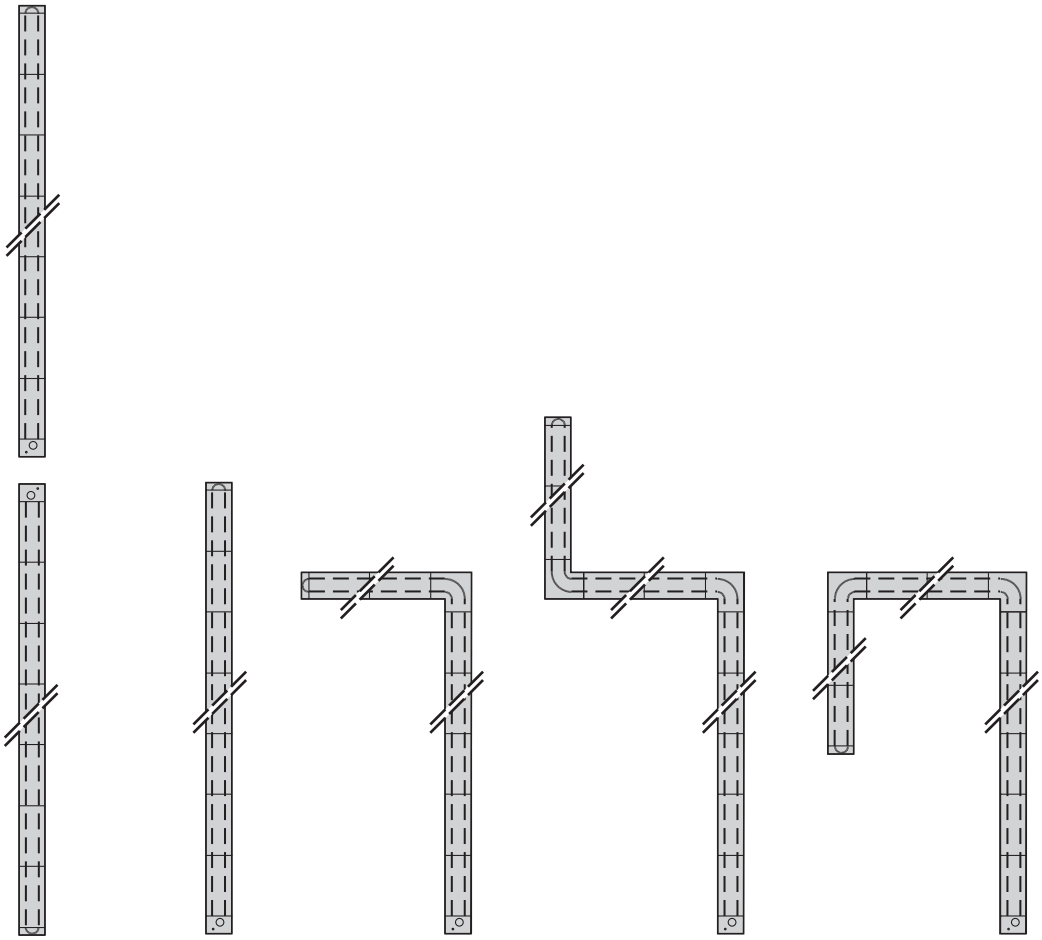

TWIN Straight L Z U

Controls

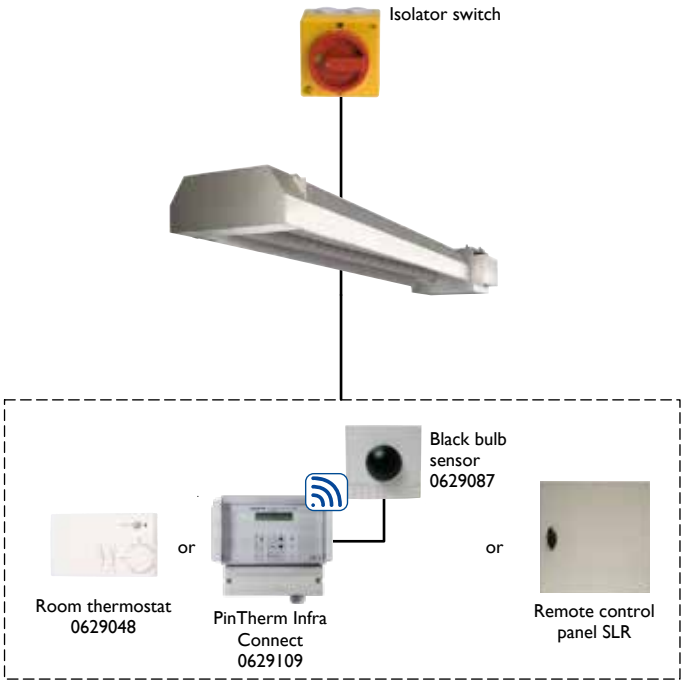

INFRA HT

GAS-FIRED RADIANT HEATER

Ideal for heating tall or poorly insulated buildings

The INFRA HT offers the option of heating without displacing air. In addition, heat reaches only the location where it is required. The short warming-up period and the lower room temperature can yield good energy savings. Savings can be as high as 40%.

The INFRA HT uses an open ceramic burner for heating. This emits a high level of heat over a relatively small surface area. This high concentration of heat enables these units to be located in tall buildings.

As this unit uses open combustion, ventilation within the room must be considered. The room may be ventilated with the Mark MDV BLUE, for example – see page 122.

Mark supplies the INFRA HT in 9 different capacities with the length of the unit increasing as the capacity increases.

The Infra HT and the HT Eco have the same output. The HT has a very high radiant efficiency and a competitive price. The HT Eco has a good performance and a very competitive price.

Possible applications include: construction halls, production facilities, aircraft hangars and stadium grandstands or other open spaces.

The benefits of radiant heating include:
- Short warm-up time
- High floor temperature
- Silent
- No air movement
- Low energy consumption
- "Zone" heating
- Heat only where needed

Remote connection possible with the PinTherm Infra Connect!

mark®

Dimensions

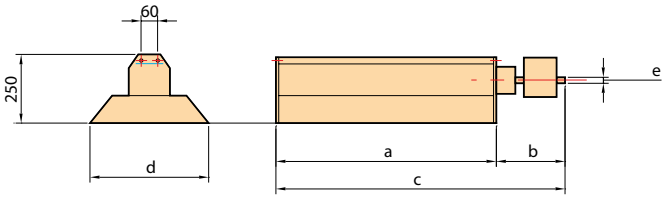

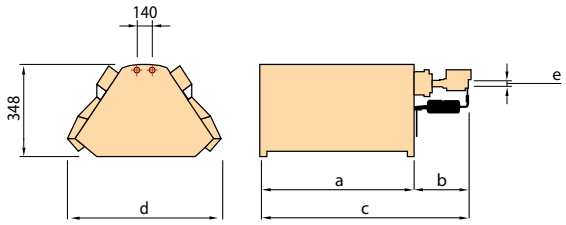

Type	a (mm)	b (mm)	c (mm)	d (mm)	e (inch/zoll)
Infra HT 4.2 eco	420	250	670	370	1/2”
Infra HT 6.2 eco	605	250	855	370	1/2”
Infra HT 8.2 eco	790	250	1040	370	1/2”
Infra HT 10.2 eco	975	250	1225	370	1/2”
Infra HT 12.2 eco	1160	250	1410	370	1/2”
Infra HT 16.2 eco	1530	250	1780	370	1/2”
Infra HT 10+10.2 eco	975	300	1275	600	1/2”
Infra HT 12+12.2 eco	1160	300	1460	600	1/2”
Infra HT 16+16.2 eco	1530	300	1830	600	1/2”

Type	a (mm)	b (mm)	c (mm)	d (mm)	e (inch/zoll)
Infra HT 4.2	421	162	583	592	1/2”
Infra HT 6.2	604	162	766	592	1/2”
Infra HT 8.2	791	162	953	592	1/2”
Infra HT 10.2	991	162	1137	592	1/2”
Infra HT 12.2	1158	218	1376	592	1/2”
Infra HT 16.2	1529	218	1747	592	1/2”
Infra HT 10+10.2	975	241	1216	822	3/4”
Infra HT 12+12.2	1158	297	1455	822	3/4”
Infra HT 16+16.2	1529	297	1826	822	3/4”

Technical information

Infra HT / Infra HT eco		4.2	6.2	8.2	10.2	12.2	16.2	10+10.2	12+12.2	16+16.2
Surface area exposed to radiation	m^2	30-40	35-50	40-65	55-90	60-100	80-110	85-115	95-155	110-180
Nominal load G20 (upper value)	kW	7,2	9,6	16,1	18,3	22,2	34,4	36,6	44,4	68,8
Nominal load G20 (lower value)	kW	6,5	8,6	14,5	16,5	20,0	31,0	33,0	40,0	62,0
Nominal load G25 (upper value)	kW	7,2	9,6	16,1	18,3	22,2	34,4	36,6	44,4	68,8
Nominal load G25 (lower value)	kW	6,5	8,6	14,5	16,5	20,0	31,0	33,0	40,0	62,0
Nominal load G30 (upper value)	kW	7,0	9,3	13,5	17,9	21,7	33,6	35,8	43,4	67,2
Nominal load G30 (lower value)	kW	6,5	8,6	12,5	16,5	20,0	31,0	33,0	40,0	62,0
Nominal load G31 (upper value)	kW	7,0	9,3	13,5	17,9	21,7	33,6	35,8	43,4	67,2
Nominal load G31 (lower value)	kW	6,5	8,6	12,5	16,5	20,0	31,0	33,0	40,0	62,0
Gas-regulating unit	n°	1	1	1	1	1	1	2	2	2
Gas consumption G20 (15°C)	m^3/h	0,69	0,91	1,53	1,75	2,12	3,43	3,50	4,24	6,70
Gas consumption G25 (15°C)	m^3/h	0,80	1,06	1,78	2,03	2,46	3,75	4,06	4,92	7,50
Gas consumption G30 (15°C)	kg/h	0,51	0,68	0,99	1,30	1,58	2,42	2,60	3,16	4,84
Gas consumption G31 (15°C)	kg/h	0,50	0,67	0,97	1,28	1,55	2,40	2,56	3,10	4,80
Electrical power	W	25	25	25	25	25	25	50	50	50
Ignition	electronic	x	x	x	x	x	x	x	x	x
Electrical connection	230 Volt-50Hz	x	x	x	x	x	x	x	x	x
Weight of HT	kg	14	17	21	24	28	35	40	47	57
Weight of HT eco	kg	8	10	12	14	17	21	29	34	40

The minimum ventilation air volume of the area is 10 m^3/h per installed kW.

Assembly/location suggestions

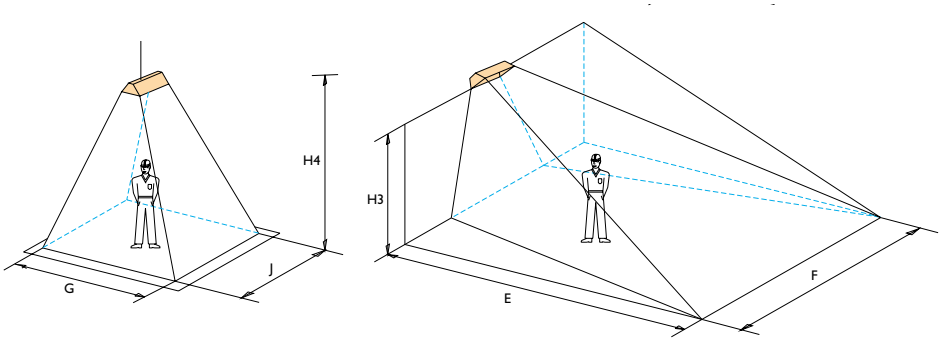

Recommended suspension height for installing high temperature radiators.

(Ceiling 0°)

Infra HT		4.2	6.2	8.2	10.2	12.2	16.2	10+10.2	12+12	16+16.2
H4 min-max	m	2,5-4,5	3,5-6,0	4,0-6,0	5,0-7,0	6,0-8,0	6,0-10,0	8,0-11,0	9,0-14,0	10-18
G	m	4,0	5,0	7,5	8	8,5	9,0	10,0	11,0	12,0
J	m	5,5	7,0	8,0	8,5	9,0	10,0	11,0	12,0	13,0

(Floor 45°)

Infra HT		4.2	6.2	8.2	10.2	12.2	16.2	10+10.2	12+12	16+16.2
H3 min - max	m	2,5-4,0	2,9-5,5	3,9-6,5	4,5-7,0	4,7-8,5	5,1-10,0	5,1-11,0	5,6-14,0	6,0-15,0
E	m	4,0	5,0	7,5	7,8	8,0	8,5	9,0	10,0	12,0
F	m	4,5	6,0	8,0	8,5	9,0	10,0	11,0	12,0	14,0

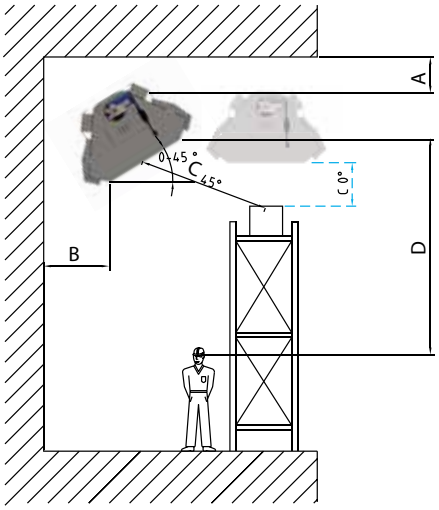

Minimum distances (ceiling 0°)

Type	A	B	D
HT 4.2	1,0	1,0	2,0
HT 6.2	1,0	1,0	2,5
HT 8.2	1,5	1,5	3,0
HT 10.2	1,5	1,5	3,5
HT 12.2	1,5	2,0	4,0
HT 16.2	1,5	2,0	4,5
HT 10+10.2	2,0	2,5	5,0
HT 12+12.2	1,5	2,5	5,5
HT 16+16.2	2,0	2,5	6,0

Minimum distances (floor 45°)

Type	A (m)	B (m)	C (m)	D 45° - 0° (m)
HT 4.2	1,0	0,5	2,0	2,4 - 3,0
HT 6.2	1,0	0,5	2,0	2,9 - 3,5
HT 8.2	1,5	0,5	2,5	3,9 - 4,5
HT 10.2	1,5	0,5	2,5	4,2 - 4,8
HT 12.2	1,5	0,5	2,5	4,7 - 5,5
HT 16.2	1,5	0,75	3,0	5,1 - 6,0
HT 10+10.2	2,0	0,75	3,0	5,0 - 6,2
HT 12+12.2	1,5	0,75	3,0	5,6 - 6,5
HT 16+16.2	2,0	1,0	3,5	6,0 - 7,1

Controls

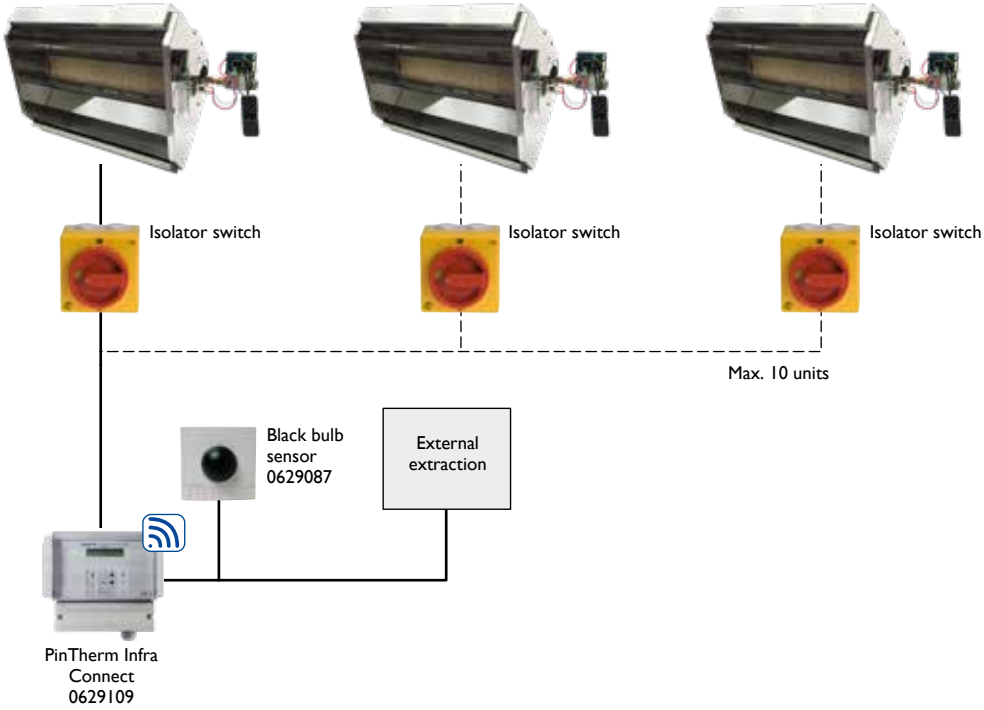
Isolator switch
Isolator switch
Isolator switch
Max. 10 units
Black bulb sensor 0629087
External extraction
PinTherm Infra Connect 0629109

Prices Mark INFRA HT

PRODUCT - INFRA HT

Code nr.	Description	Price
	INFRA HT 4.2, nominal power 6,5 kW, H/L	€ 1192
	INFRA HT 6.2, nominal power 8,6 kW, H/L	€ 1381
	INFRA HT 8.2, nominal power 14,5 kW, H/L	€ 1506
	INFRA HT 10.2, nominal power 16,5 kW, H/L	€ 1591
	INFRA HT 12.2, nominal power 20,0 kW, H/L	€ 1668
	INFRA HT 16.2, nominal power 31,0 kW, H/L	€ 1922
	INFRA HT 10+10.2, nominal power 33,0 kW, H/L	€ 2639
	INFRA HT 12+12.2, nominal power 40,0 kW, H/L	€ 2842
	INFRA HT 16+16.2, nominal power 62,0 kW, H/L	€ 3519

PRODUCT - INFRA HT ECO

Code nr.	Description	Price
	INFRA HT 4.2 eco, nominal power 6,5 kW, On/Off	€ 1048
	INFRA HT 6.2 eco, nominal power 8,6 kW, On/Off	€ 1169
	INFRA HT 8.2 eco, nominal power 14,5 kW, On/Off	€ 1264
	INFRA HT 10.2 eco, nominal power 6,5 kW, On/Off	€ 1361
	INFRA HT 12.2 eco, nominal power 20,0 kW, On/Off	€ 1414
	INFRA HT 16.2 eco, nominal power 31,0 kW, On/Off	€ 1668
	INFRA HT 10+ 10.2 eco, nominal power 33,0 kW, On/Off	€ 2241
	INFRA HT 12+ 12.2 eco, nominal power 40,0 kW, On/Off	€ 2392
	INFRA HT 16+ 16.2 eco, nominal power 62,0 kW, On/Off	€ 2952

ACCESSORIES - CONTROL

Code nr.	Description	Price
0629109	PinTherm Infra Connect – programmable thermostat with Ethernet and Modbus, 230V (4A)****	€ 459
3003795	Zone control Infra*****	€ 1648
0629087	External Black bulb sensor for 0629109	€ 124
0629082	External Black bulb sensor RSTF PT1000 for 3003795	€ 108
0631162	Isolator switch, separate delivery, 230V (2 poles)	€ 56
0631163	Isolator switch, separate delivery, 400V (4 poles)	€ 64

For function explanation see chapter on control

ACCESSORIES - ASSEMBLY

Code nr.	Description	Price
5998000	Wall bracket for INFRA HT 4.2 - 16.2*	€ 47
5998002	Suspended bracket for INFRA HT 4.2 - 16.2	€ 37
5998003	Suspended bracket for INFRA HT 10+10.2, 12+12.2 and 16+16.2	€ 70

ACCESSORIES

Code nr.	Description	Price
5018025	Flexible gas hose 3/4" - 1/2"	€ 127
	Conversion kit natural gas to propane gas**	€ 75

REMARK

* No wall bracket for INFRA HT 10+10.2, 12+12.2 en 16+16.2 available

** A conversion kit must be ordered for the exact type of unit and consist of.
1 nozzle
1 technical plate
1 technical manual for instructions

*** Only select when the unit is high/low

**** Also order 0629087

***** Also order 0629082 (one for each zone)

INFRA ER 2600W

ELECTRIC RADIANT HEATER

Efficient heating with infrared radiation

The INFRA ER 2600W heats objects in a room directly, without air displacement. Due to the short warm-up time and the lower room temperature, high energy savings can be achieved.

Heating a room with infrared radiation offers many advantages over conventional air heating. For example, objects in a room are heated directly, without the air having to be heated first. There is no air displacement and therefore no dust displacement, and infrared has the same positive effects as sunlight, including stimulating blood circulation for better recovery of muscles and joints.

Possible applications include: production and logistics halls, offices, schools, churches, homes, catering, shops and patio heating

Features:
- Colour: black
- Heats 12-18m²
- 2 settings on the remote control, 24-hour timer control, weekly timer
- MICA radiation system
- Protection against overheating
- Quiet
- Fast and pleasantly warm
- Targeted heat, no air displacement
- Invisible radiation
- IP 65 protection class

Standard equipment:
- Mounting brackets suitable for wall / ceiling.

Optional:
- Remote control

mark®

Dimensions

Infra ER 2600W		L	W	H
With remote control	mm	1390	160	85
With on/off button	mm	1510	160	50

Technical information

Infra ER 2600W	Voltage (V)	Wattage (W)	Hertz (Hz)	Weight
With remote control	220-240 V AC	2600	50/60	8,5
With on/off button	220-240 V AC	2600	50/60	8,2

Assembly/location suggestions

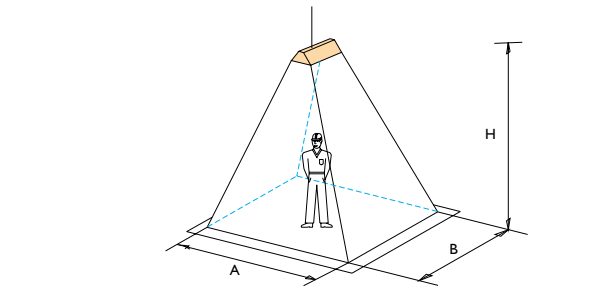

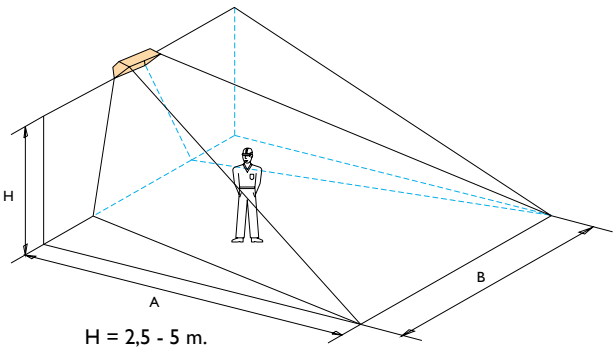

H = 2,5 - 5 m.
AxB = 12 - 18 m²

Controls

INFRA ER 2600W with on/off button:

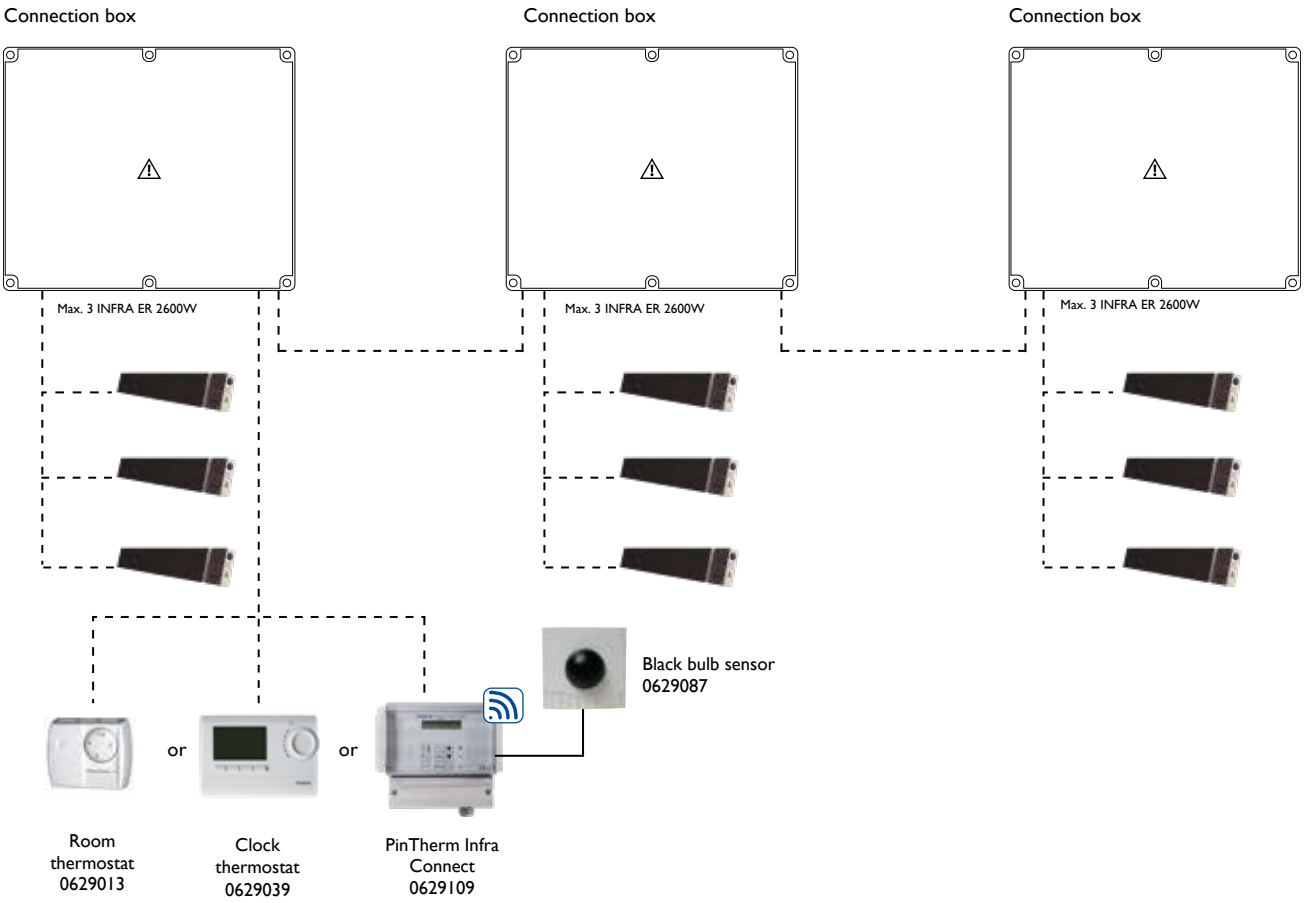

Prices Mark INFRA ER 2600W

PRODUCT - INFRA ER 2600W

Code nr.	Description	Price
5999604	Infra ER 2600W with control remote	€ 498
5999608	Infra ER 2600W with on/off button	€ 440

ACCESSORIES - CONTROL

Code nr.	Description	Price
0629109	PinTherm Infra Connect – programmable thermostat with Ethernet and Modbus, 230V (4A)	€ 459
0629087	External Black bulb sensor for 0629109	€ 124
0629039	Clock thermostat (1A)	€ 350
0629013	Room thermostat 230V, (4A)	€ 51
3003790	Connection box for max. 3x Infra ER 2600W	€ 633

INFRA ER+ 2500W

ELECTRIC RADIANT HEATER

Up to 90% heat efficiency with Carbon Infrared

The INFRA ER+ 2500W is a Carbon Infrared heater that heats objects and people directly within 3 seconds using the latest technology. This Carbon Fiber heater emits infrared rays with a longer wavelength for a more efficient and therapeutic radiation of the skin.

The INFRA ER+ 2500W is very economical and, despite the low energy consumption, offers a large capacity with regard to the surface to be heated. In addition, the lifespan is very long; up to 10,000 hours. In comparison; A halogen infrared tube often needs to be replaced after +/- 5000 operating hours.

Heating a room with infrared radiation offers many advantages over conventional air heating. For example, objects in a room are heated directly, without the air having to be heated first. There is no air displacement and therefore no dust displacement, and infrared has the same positive effects as sunlight, including stimulating blood circulation for better recovery of muscles and joints.

Possible applications include: production and logistics halls, offices, schools, churches, homes, catering, shops and patio heating.

Features:
- Colour: black
- Medium wave infrared
- Heats 12-24m²
- 4 settings on the remote control, 24-hour timer control, weekly timer
- Carbon fiber lamp
- Protection against overheating
- Quiet
- Soft heat lights, not bothersome
- Fast and pleasantly warm in 3 sec
- Lifespan of 10,000 hours
- Targeted heat, no air displacement
- 90% efficiency
- IP 55 protection class

Dimensions

		L	B	H
Infra ER+ 2500W	mm	900	130	89,5

Technical information

	Voltage (V)	Wattage (W)	Hertz (Hz)	Weight
Infra ER+ 2500W	220-240 V AC	2500	50/60	3,0

Assembly/location suggestions

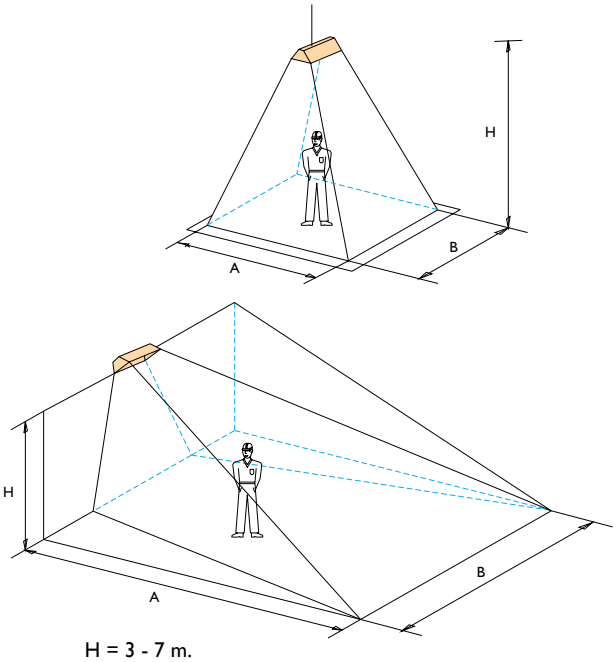

H = 3 - 7 m.
AxB = 12 - 24 m²

Prices Mark INFRA ER+ 2500W

PRODUCT - INFRA ER+ 2500W

Code nr.	Description	Price
5999612	Infra ER+ 2500W With remote control	€ 363

INFRA AQUA DESIGN

WATER-SUPPLIED RADIANT PANEL

Silent, pleasant heat from a designer product

The INFRA AQUA DESIGN is a water-supplied aluminium radiation panel, fitted with a glass wool insulation blanket as standard. This insulation blanket prevents heat from being radiated upwards.
This appliance offers the option of heating without displacing air. In addition, heat reaches only the location where it is required. The short warming-up period and the lower room temperature can yield good energy savings.

The INFRA AQUA DESIGN has a very wide area of application in both utility and industrial buildings. The panel may even be integrated into a system ceiling.

As an option, the aluminium radiant panel can be supplied with PUR hard foam insulation. This form of insulation is frequently used if the panel is installed in rooms sensitive to bacteria.

Heating with the INFRA AQUA DESIGN means heating without any draughts or displacement of air or dust.

The panel can be supplied in various widths and lengths, and in RAL 9010 white colour as standard. Other RAL-colours are available on request.

Features:
- Aluminium panel, low weight per metre.
- Aesthetically pleasing and completely flat panel.
- High heat delivery compared to steel panels
- Special designs with ventilation are possible.
- Galvanized distributors and registers possible when used in wet spaces.
- Approved in accordance with EN 14037 1-3
- Ball-resistant in accordance with DIN 18032 dl3
- Glass wool insulation (PUR optional)
- Acoustic panels (on demand)

For more information please see our technical brochure on www.markclimate.com

mark®

Dimensions

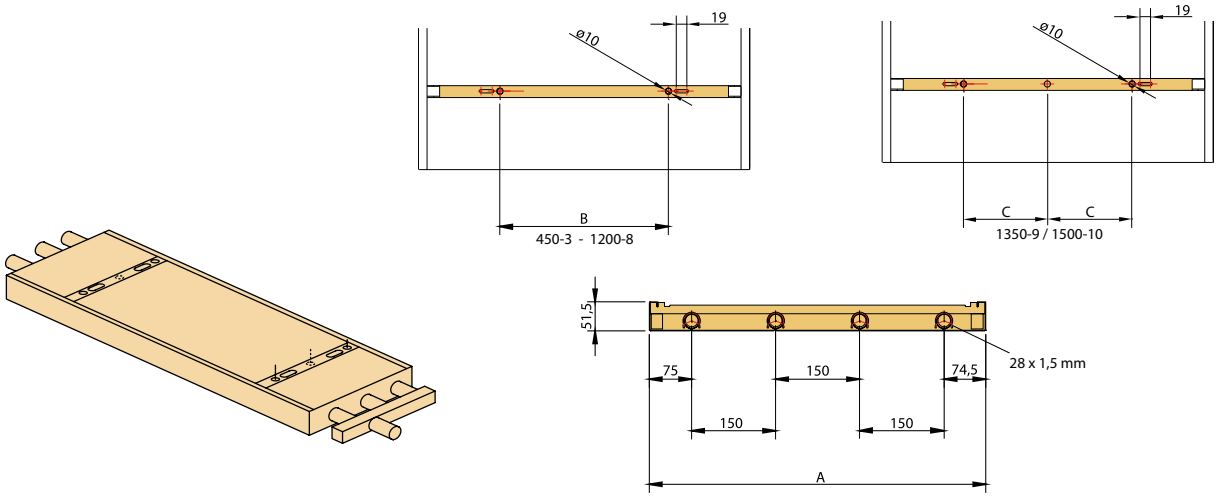

Type	450-3	600-4	750-5	900-6	1050-7	1200-8	1350-9	1500-10
Width = A	440	590	740	890	1040	1190	1340	1490
B/C in mm	200	300	450	600	750	600	375	450
Suspension points (6m)	3x2	3x2	3x2	3x2	3x2	3x2	3x3	3x3
Number of pipes	3	4	5	6	7	8	9	10

Technical information

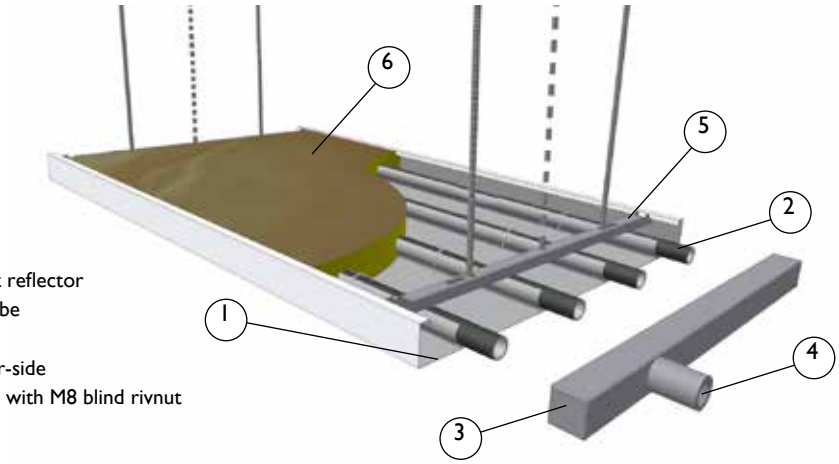

1 = Aluminium radiant reflector
2 = Water-carrying tube
3 = Distributor
4 = Connection, water-side
5 = Suspension profile with M8 blind rivnut
6 = Insulating material

Type		450-3	600-4	750-5	900-6	1050-7	1200-8	1350-9	1500-10
Heat delivery 15°C (90/70°C) room temperature	W/m	300	377	453	529	608	686	764	842
Water content	kg/m	1,47	1,96	2,45	2,94	3,43	3,92	4,41	4,90
Weight of panel GLW (filled)	kg/m	6,24	8,49	10,55	12,82	14,67	16,73	18,79	20,85
Weight of panel PUR (filled)	kg/m	6,87	9,44	11,74	15,42	16,35	18,66	*	*
Weight of distributor GLW/PUR (filled)	kg/m	1,55	2,13	2,70	3,28	3,86	4,44	5,01	5,58

* Not available with PUR.

RADIANT PANEL TYPE 450-3 to 1500-10

Heat delivery table in W/m1 in accordance with EN 14037 1-3

K	450-3	600-4	750-5	900-6	1050-7	1200-8	1350-9	1500-10
115	578	723	868	1011	1162	1313	1465	1618
110	549	687	825	961	1104	1248	1392	1537
105	521	652	782	911	1047	1183	1320	1457
100	492	616	739	862	990	1119	1248	1378
95	464	581	697	813	934	1056	1177	1299
90	436	546	656	765	878	992	1106	1221
85	408	512	614	717	823	930	1036	1144
80	381	477	573	669	768	868	967	1067
75	354	443	533	622	714	807	899	991
70	327	410	493	576	661	746	831	916
69	322	403	485	566	650	734	817	901
68	316	397	477	557	639	722	804	887
67	311	390	469	548	629	710	791	872
66	306	383	461	539	618	698	777	857
65	300	377	453	529	608	686	764	842
64	295	370	445	520	597	674	751	828
63	290	364	438	511	587	662	737	813
62	285	357	430	502	576	650	724	798
61	279	351	422	493	566	638	711	784
60	274	344	414	484	555	627	698	769
59	269	338	406	475	545	615	685	755
58	264	331	399	466	534	603	671	740
57	259	325	391	457	524	591	658	726
56	254	318	383	448	514	580	645	711
55	248	312	375	439	503	568	632	697
54	243	306	368	430	493	556	619	683
53	238	299	360	421	483	545	607	668
52	233	293	353	412	473	533	594	654
51	228	287	345	403	463	522	581	640
50	223	280	337	395	453	510	568	626
49	218	274	330	386	442	499	555	612
48	213	268	322	377	432	488	543	598
47	208	261	315	368	422	476	530	584
46	203	255	307	360	412	465	517	570
45	198	249	300	351	402	454	505	556
44	193	243	293	342	392	442	492	542
43	188	237	285	334	383	431	480	528
42	183	231	278	325	373	420	467	515
41	178	224	270	317	363	409	455	501
40	174	218	263	308	353	398	443	487
39	169	212	256	300	343	387	430	474
38	164	206	249	291	334	376	418	460
37	159	200	241	283	324	365	406	447
36	154	194	234	274	314	354	394	433
35	150	188	227	266	305	343	382	420
30	126	159	192	225	257	290	322	354
25	103	130	157	185	211	238	264	290
20	81	102	124	146	166	187	208	229
15	60	76	92	108	123	139	154	169

DISTRIBUTOR, TYPE 450-3 to 1500-10

Heat delivery table in W/m1 in accordance with EN 14037 1-3 per 2 distributors

K	450-3	600-4	750-5	900-6	1050-7	1200-8	1350-9	1500-10
115	88	113	138	164	184	203	223	243
110	84	107	131	155	174	193	212	230
105	79	101	124	147	164	182	200	218
100	75	96	117	138	155	172	189	205
95	70	90	110	130	146	161	177	193
90	66	84	103	122	136	151	166	181
85	62	79	96	114	127	141	155	169
80	58	73	89	106	118	131	144	157
75	53	68	83	98	110	121	133	145
70	49	63	76	90	101	112	123	134
69	49	62	75	88	99	110	121	131
68	48	61	74	87	97	108	118	129
67	47	60	72	85	96	106	116	127
66	46	59	71	84	94	104	114	124
65	45	58	70	82	92	102	112	122
64	44	57	69	81	91	100	110	120
63	44	55	67	79	89	98	108	118
62	43	54	66	78	87	97	106	115
61	42	53	65	76	85	95	104	113
60	41	52	64	75	84	93	102	111
59	40	51	62	73	82	91	100	109
58	40	50	61	72	81	89	98	107
57	39	49	60	70	79	87	96	104
56	38	48	59	69	77	86	94	102
55	37	47	57	67	76	84	92	100
54	37	46	56	66	74	82	90	98
53	36	45	55	64	72	80	88	96
52	35	44	54	63	71	78	86	94
51	34	43	52	62	69	77	84	91
50	33	42	51	60	67	75	82	89
49	33	41	50	59	66	73	80	87
48	32	40	49	57	64	71	78	85
47	31	39	48	56	63	69	76	83
46	30	38	47	55	61	68	74	81
45	30	38	45	53	60	66	72	79
44	29	37	44	52	58	64	71	77
43	28	36	43	50	56	63	69	75
42	27	35	42	49	55	61	67	73
41	27	34	41	48	53	59	65	71
40	26	33	40	46	52	57	63	69
39	25	32	38	45	50	56	61	67
38	24	31	37	44	49	54	59	65
37	24	30	36	42	47	52	58	63
36	23	29	35	41	46	51	56	61
35	22	28	34	40	44	49	54	59
30	19	24	28	33	37	41	45	49
25	15	19	23	27	30	33	37	40
20	12	15	18	21	23	26	28	31
15	9	11	13	15	17	19	21	22

K = Average water temperature - room temperature. Values for a mass flow of 0.04 litres per second/pipe.

Accessories – additional sections

Relation between minimum mass flow and return temperature

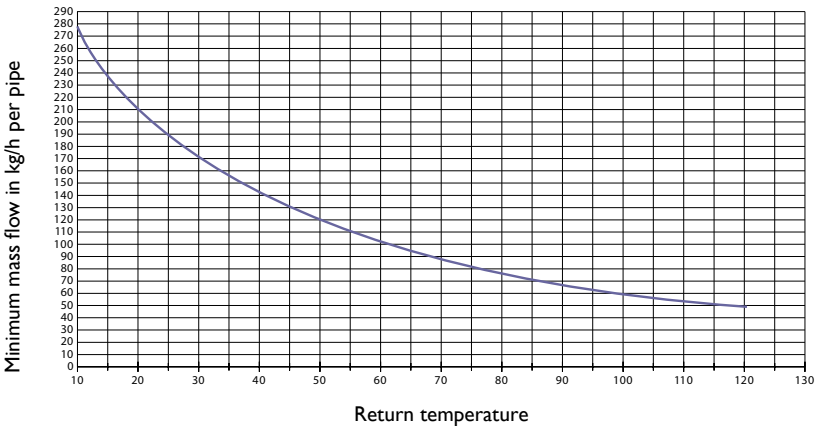

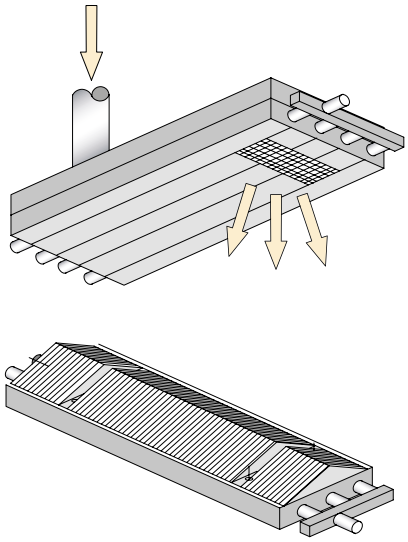

INFRA AQUA ECO

WATER-SUPPLIED RADIANT PANEL

Economic heating and cooling using a lightweight panel

The INFRA AQUA ECO is a water-supplied radiation panel, fitted with a glass wool insulation blanket as standard. This insulation blanket prevents heat from being radiated upwards.
This appliance offers the option of heating without displacing air. In addition, heat reaches only the location where it is required. The short warming-up period and the lower room temperature can yield good energy savings.

The INFRA AQUA ECO has a very wide area of application in both utility and industrial buildings.

The panels are delivered in standard lengths of 4 or 6 metres. The panels may also be suspended in parallel with standard widths varying between 305 - 1.300 mm.

The panel is supplied in white RAL 9010 as standard. Other RAL colours are available on request.

Features
- Simple installation / suspension
- Low weight per metre
- High heat emission
- Galvanized finish for collectors and registers (optional)
- Linking of panels by means of press couplings
- Measured and approved in accordance with EN 14037 1-3
- Ball-resistant

For more information please see our technical brochure on www.markclimate.com

mark®

Dimensions

TYPE 1

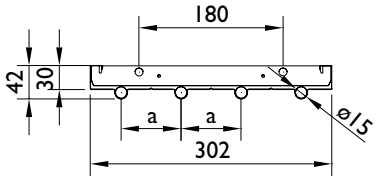

TYPE 2

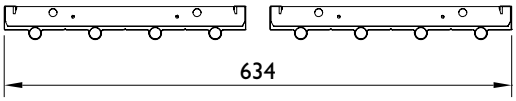

TYPE 3

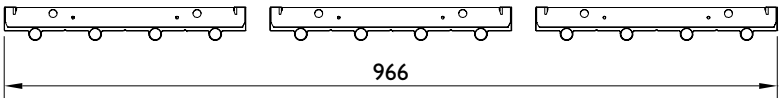

TYPE 4

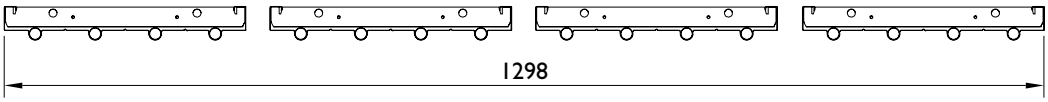

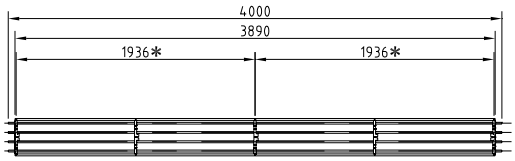

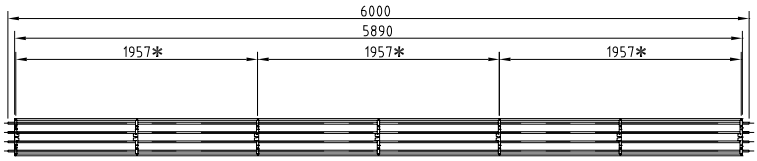

INFRA AQUA ECO		Type 1	Type 2	Type 3	Type 4
Tube distance (a)	mm	75	75	75	75
Outside diameter of tube	mm	15	15	15	15
Number of suspension points per axis		2	2	2	2
Operating weight with water content and insulation (4 m)	kg	12,4	24,8	37,2	50
Operating weight with water content and insulation (6 m)	kg	18,5	37	55,5	74

Max. operating temperature: 120°C. Max. operating pressure: 8 bar
* Suspension points from centre point to centre point.

Technical information

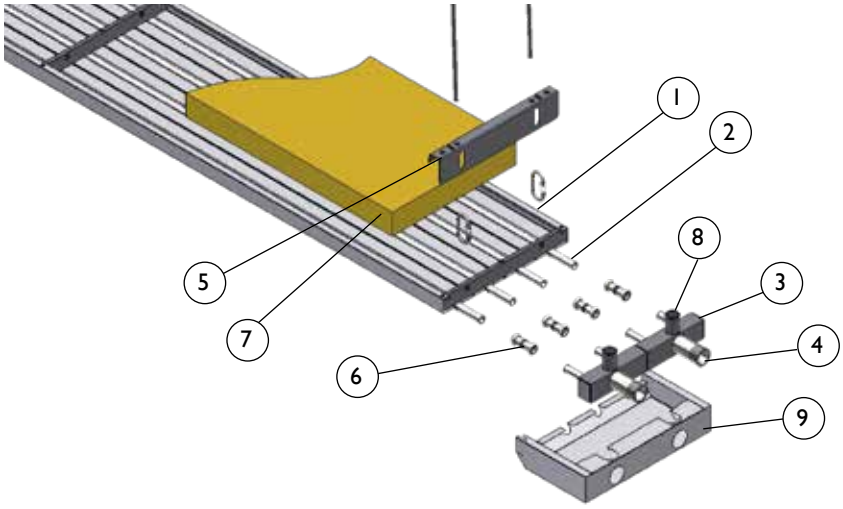

1 = Reflector
2 = Water tube
3 = Collector
4 = Water connection 1"
5 = Suspension set (profile and carabiners)
6 = Press-fittings (optional)
7 = Insulating material (supplied separately)
8 = De-aerater connection ½ "
(air point not supplied by Mark)
9 = Cover plate (supplied separately)

Medium over temp K	Type 1	Type 2	Type 3	Type 4
115	476	952	1428	1904
110	451	903	1354	1806
105	427	855	1282	1709
100	403	807	1210	1613
95	380	759	1139	1518
90	356	712	1068	1424
85	333	666	998	1331
80	310	619	929	1239
75	287	574	861	1148
70	264	529	793	1058
69	260	520	780	1040
68	256	511	767	1022
67	251	502	753	1004
66	247	493	740	987
65	242	485	727	969
64	238	476	714	951
63	233	467	700	934
62	229	458	687	916
61	225	449	674	899
60	220	441	661	881
59	216	432	648	864
58	212	423	635	847
57	207	415	622	830
56	203	406	609	812
55	199	398	596	795
54	195	389	584	778
53	190	381	571	761
52	186	372	558	744
51	182	364	545	727
50	178	355	533	710
49	173	347	520	694
48	169	338	508	677
47	165	330	495	660
46	161	322	483	644
45	157	314	470	627
44	153	305	458	611
43	149	297	446	594
42	144	289	433	578
41	140	281	421	562
40	136	273	409	546
39	132	265	397	529
38	128	257	385	513
37	124	249	373	497
36	120	241	361	482
35	116	233	349	466
30	97	194	291	388
25	78	156	235	313
20	60	120	180	240
15	43	85	128	171

Heat delivery table for panels in W/m in accordance with EN 14037 1-3

Medium over temp K	Type 1	Type 2	Type 3	Type 4
115	165	330	494	659
110	156	312	468	624
105	147	295	442	590
100	139	278	417	556
95	131	261	392	522
90	122	244	367	489
85	114	228	342	456
80	106	212	318	423
75	98	196	293	391
70	90	180	270	360
69	88	177	265	353
68	87	174	260	347
67	85	170	256	341
66	84	167	251	335
65	82	164	246	329
64	81	161	242	322
63	79	158	237	316
62	78	155	233	310
61	76	152	228	304
60	74	149	223	298
59	73	146	219	292
58	71	143	214	286
57	70	140	210	280
56	68	137	205	274
55	67	134	201	268
54	66	131	197	262
53	64	128	192	256
52	63	125	188	250
51	61	122	183	244
50	60	119	179	239
49	58	116	175	233
48	57	113	170	227
47	55	111	166	221
46	54	108	162	215
45	52	105	157	210
44	51	102	153	204
43	50	99	149	198
42	48	96	145	193
41	47	94	140	187
40	45	91	136	182
39	44	88	132	176
38	43	85	128	171
37	41	83	124	165
36	40	80	120	160
35	39	77	116	154
30	32	64	96	128
25	26	51	77	102
20	19	39	58	78
15	14	27	41	55

Heat delivery table per 2 distributors in W/unit in accordance with EN 14037 1-3

Relation between minimum mass flow and return temperature

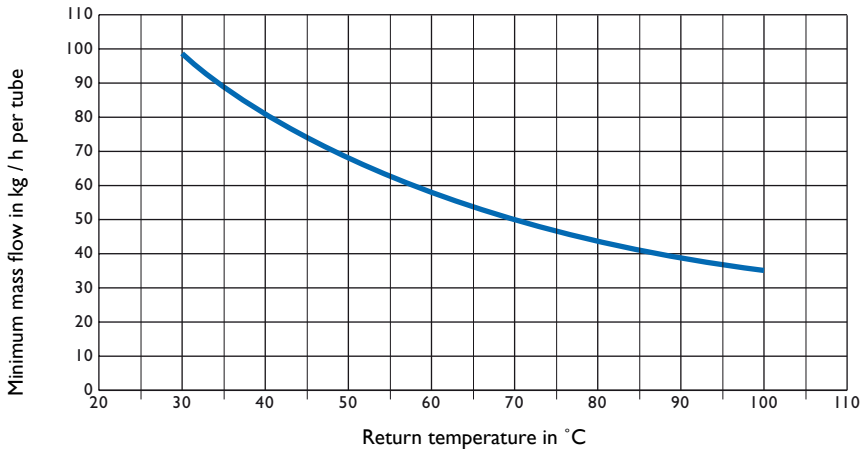

Radiant panel for grid type ceiling

The Mark CEILFIT gives a comfortable work and living environment through heating and cooling by convection and radiation. It is easy to regulate zones or rooms individually to ensure a pleasant surrounding. Due to the exclusion of radiators, extra wall and floor space is made available.

Our panels are compatible with grid type ceilings and can replace the standard tile without any additional work to the grid. The standard panels are available in common standard grid dimension, or as custom dimensions on request.

The Mark CEILFIT is constructed of RAL 9010 powder coated 0,7 mm steel sheet fused to copper tube. The copper tubing allows a quick and efficient heat or cooling transfer. The copper tubing is a 10x0,4mm high quality precision tubing that can withstand pressure up to 6 bar.

Panels can be optionally insulated with mineral wool with an aluminium foil layer. Dummy panels can be fitted to accomodate lightning, sensors, ventilation or other additions to the ceiling.

The panels are also available with perforation for a better sound absorption.

To support the weight of a fluid filled panel we strongly advise to add suspension wires from the panels to a structural part of the building or ceiling. The panels are accomodated with several holes to fix the supension brackets or cables.

The Mark CEILFIT can be used in offices, schools, hospitals, public buildings and clinics.

All CEILFIT products are in accordance with the NEN-EN 13964 regulation.

Features
- Easy to clean
- Frees up floor and wall space
- Rapid warm up times, due to low water content
- Low air movement
- Low pressure drop (operating pressures)
- Low whole life costs - lack of moving parts
- Easily installed in standard T-Grid ceiling
- Cost efficient heating and cooling

Dimensions

CEILFIT 600

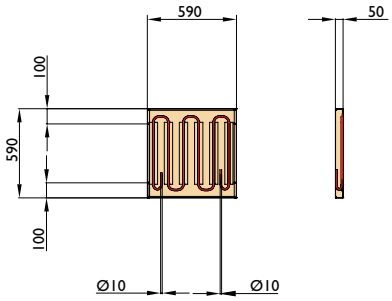

CEILFIT 1200

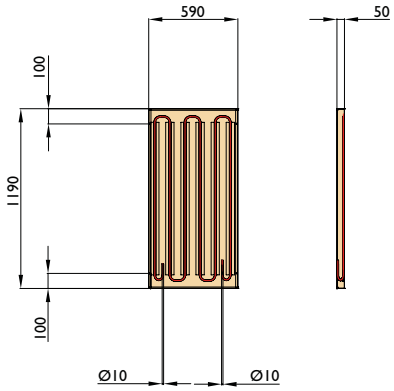

CEILFIT 1800

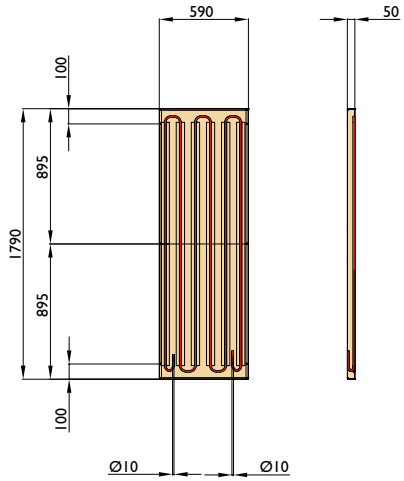

CEILFIT 2400

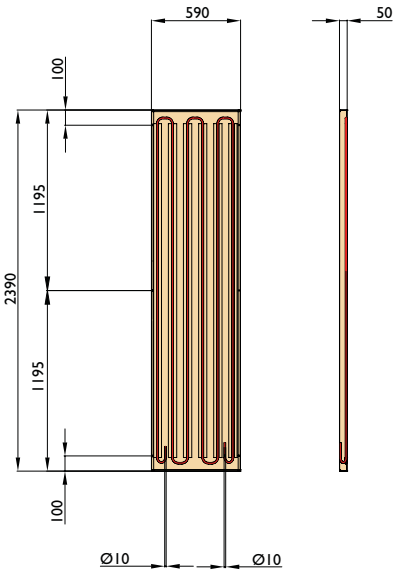

CEILFIT 3000

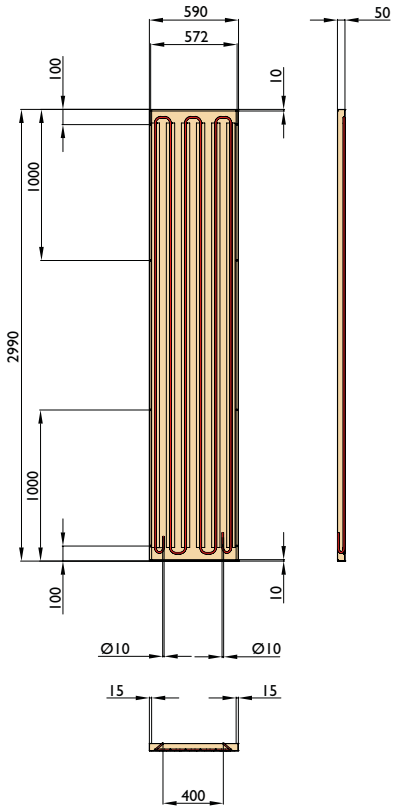

Type	Width	Length
	mm	mm
600	590	590
1200	590	1190
1800	590	1790
2400	590	2390
3000	590	2990

Technical information

Type		600	1200	1800	2400	3000
Panel weight without water content	kg	3,8	7,4	11,2	14,9	18,6
Panel weight with water content	kg	4,0	7,9	11,9	15,8	19,8

HEAT DELIVERY PER PANEL IN WATT

with insulation					
K	600	1200	1800	2400	3000
90	293	653	1012	1371	1729
89	289	644	998	1352	1706
88	285	635	984	1333	1682
87	281	628	972	1317	1662
86	277	619	959	1299	1638
85	274	611	947	1282	1618
84	270	602	933	1264	1594
83	266	594	921	1247	1574
82	262	586	907	1229	1550
81	259	578	895	1213	1530
80	255	570	883	1196	1509
79	251	561	870	1178	1486
78	248	554	858	1161	1466
77	244	545	844	1143	1442
76	241	537	832	1127	1422
75	237	529	820	1110	1401
74	233	520	806	1092	1378
73	230	513	794	1076	1357
72	226	505	782	1059	1337
71	222	496	768	1041	1313
70	219	488	756	1024	1293
69	215	480	744	1008	1272
68	212	473	732	992	1252
67	208	464	719	973	1228
66	204	456	707	957	1208
65	201	448	695	941	1187
64	197	441	683	925	1167
63	194	433	671	908	1146
62	190	424	657	890	1123
61	186	416	645	873	1102
60	183	408	633	857	1082
59	180	401	621	841	1061
58	176	393	609	825	1041
57	173	385	597	808	1020
56	169	377	585	792	999
55	166	370	573	776	979
54	162	362	561	760	958
53	159	354	549	743	938
52	155	346	537	727	917
51	152	339	525	711	897
50	148	331	513	695	876
49	145	323	501	678	856
48	141	315	489	662	835
47	138	309	478	648	818
46	135	301	466	632	797
45	131	293	454	616	777
44	128	286	442	599	756
43	124	278	430	583	736
42	122	271	420	569	718
41	118	263	408	553	698
40	115	256	396	537	677
39	112	249	386	523	659
38	108	241	374	506	639
37	105	234	362	490	618
36	102	227	352	476	601
35	98	219	340	460	580
34	95	213	329	446	563
33	92	205	317	430	542
32	89	198	307	416	525
31	85	190	295	400	504
30	82	184	285	386	487
29	79	177	274	372	469
28	76	169	262	355	448
27	73	163	252	341	431
26	70	156	242	328	413
25	66	148	230	311	393
24	63	142	220	297	375
23	61	135	209	283	358
22	58	128	199	269	340
21	55	122	189	256	322
20	52	115	178	242	305

without insulation					
K	600	1200	1800	2400	3000
90	353	789	1222	1656	2089
89	349	778	1206	1633	2061
88	344	768	1189	1611	2032
87	340	758	1175	1591	2008
86	335	748	1158	1569	1979
85	331	738	1144	1549	1954
84	326	727	1127	1527	1926
83	322	718	1112	1507	1901
82	317	707	1096	1484	1873
81	313	698	1081	1465	1848
80	309	689	1067	1445	1823
79	304	678	1050	1423	1795
78	300	669	1036	1403	1770
77	295	658	1019	1381	1742
76	291	649	1005	1361	1717
75	286	639	990	1341	1692
74	282	629	974	1319	1664
73	277	619	959	1299	1639
72	273	610	945	1280	1615
71	268	599	928	1257	1586
70	264	590	914	1238	1561
69	260	580	899	1218	1537
68	256	571	885	1198	1512
67	251	560	868	1176	1484
66	247	551	854	1156	1459
65	243	542	839	1137	1434
64	238	532	825	1117	1409
63	234	523	810	1097	1384
62	229	512	793	1075	1356
61	225	503	779	1055	1331
60	221	493	764	1035	1306
59	217	484	750	1016	1282
58	213	475	735	996	1257
57	208	465	721	977	1232
56	204	456	706	957	1207
55	200	447	692	937	1183
54	196	437	677	918	1158
53	192	428	663	898	1133
52	188	419	648	878	1108
51	183	409	634	859	1083
50	179	400	619	839	1059
49	175	390	605	819	1034
48	171	381	590	800	1009
47	167	373	578	783	988
46	163	364	563	763	963
45	159	354	549	744	938
44	155	345	534	724	913
43	150	336	520	704	889
42	147	328	508	688	867
41	143	318	493	668	843
40	138	309	479	648	818
39	135	301	466	631	797
38	131	292	452	612	772
37	126	282	437	592	747
36	123	274	425	575	726
35	119	265	410	556	701
34	115	257	398	539	680
33	111	247	383	519	655
32	107	239	371	502	634
31	103	230	356	483	609
30	99	222	344	466	588
29	96	214	331	449	567
28	92	205	317	429	542
27	88	197	305	413	520
26	84	189	292	396	499
25	80	179	278	376	474
24	77	171	265	359	453
23	73	163	253	342	432
22	69	155	240	326	411
21	66	147	228	309	389
20	62	139	215	292	368

K = Average water temperature - room temperature. Values for a mass flow of 0.02 litres per second/pipe.
Maximum waterpressure: 6 Bar
Maximum water temperature: 80 °C
Heat delivery inline with EN 14037-5

When panels are installed below a height of 3 meter, the mean temperature of the panel should not be more than +45 °C in order to avoid radiation assymmetery.

COOLING CAPACITY PER PANEL IN WATT

with insulation					
K	600	1200	1800	2400	3000
15	52	117	181	246	310
14	49	108	168	228	288
13	45	100	155	210	265
12	41	92	142	193	243
11	37	83	129	175	221
10	34	75	116	157	199
9	30	67	104	141	178
8	26	59	91	124	156
7	23	51	79	107	135
6	19	43	67	91	114
5	16	35	55	74	93
4	12	28	43	58	73
3	9	20	31	42	54
2	6	13	20	27	34
1	3	6	10	13	16

without insulation					
K	600	1200	1800	2400	3000
15	61	136	204	285	360
14	57	126	189	265	334
13	52	116	174	244	308
12	48	106	160	223	282
11	43	97	145	203	257
10	39	87	131	183	231
9	35	78	117	163	206
8	31	68	102	143	181
7	26	59	88	124	156
6	22	50	75	105	132
5	18	41	61	86	109
4	14	32	48	67	85
3	11	23	35	49	62
2	7	15	23	32	40
1	3	7	10	14	18

K = Average water temperature - room temperature. Values for a mass flow of 0.02 litres per second/pipe.
Maximum waterpressure: 6 Bar
Cooling capacity inline with EN 14240

When panels are used for cooling, it is recommended to use non-insulated panels.
Panel cooling is dry cooling. This type of cooling requires a dew point control system.

Relationship between the minimum mass flow and return temperature

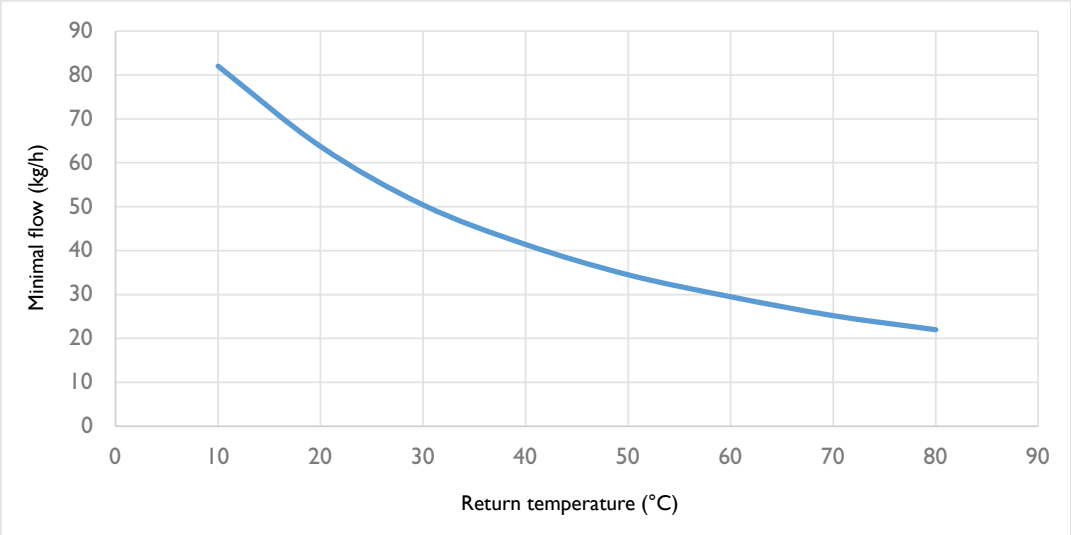

Prices Mark CEILFIT

PRODUCT - CEILFIT RADIANT PANEL NON-INSULATED

Code nr.	Description	Price
5995910	Ceilfit 600 non-insulated - 590x590 mm	€ 121
5995911	Ceilfit 1200 non-insulated - 590x1190 mm	€ 182
5995912	Ceilfit 1800 non-insulated - 590x1790 mm	€ 250
5995913	Ceilfit 2400 non-insulated - 590x2390 mm	€ 321
5995914	Ceilfit 3000 non-insulated - 590x2990 mm	€ 382

PRODUCT - CEILFIT RADIANT PANEL INSULATED

Code nr.	Description	Price
5995920	Ceilfit 600 insulated - 590x590 mm	€ 124
5995921	Ceilfit 1200 insulated - 590x1190 mm	€ 188
5995922	Ceilfit 1800 insulated - 590x1790 mm	€ 260
5995923	Ceilfit 2400 insulated - 590x2390 mm	€ 333
5995924	Ceilfit 3000 insulated - 590x2990 mm	€ 396

ECOFAN
W42-W82-W142
RECIRCULATION FAN

Easy to use, with savings up to 30% on your energy consumption

Mark recommends an ECOFAN with every air heater. A combination of these products provides optimum comfort and good heat distribution within the room. It is known that hot air rises which means that an air heater requires more time to heat up a room. A thermostatically-controlled ECOFAN transports the warm blanket under the roof to the occupied area. As a result, the room heats up more quickly, and gas consumption can in some cases be reduced by up to 30%.

The ECOFAN recirculating fan is available with various air displacements from 4.000 to 14.000 m³/h. The unit comes as standard with isolator switch and a reverse operating room thermostat that switches on the fan when the area under the ceiling becomes hot. The unit is also available as an ATEX / EEX-model, with the following classification: II 2 G Ex e T1, T2, T3 of T4.

The ECOFAN can be used in construction halls, workshops, garages and logistics areas.

Features of the Mark ECOFAN
- Aluzinc housing
- Integrated thermostat
- 4-sided downflow hood
- Low maintenance

Optional:
- ATEX / EEX-model

Remote connection possible with the PinTherm Connect!

The ECOFAN is also available with speed controlled low noise EC-motor. Advantages:
- The highest efficiency in case of speed control
- Up to 50% energy saving in case of partial load
- Almost completely linearly adjustable
- Long lifetime
- Low noise level
- Integrated electronic thermal protection

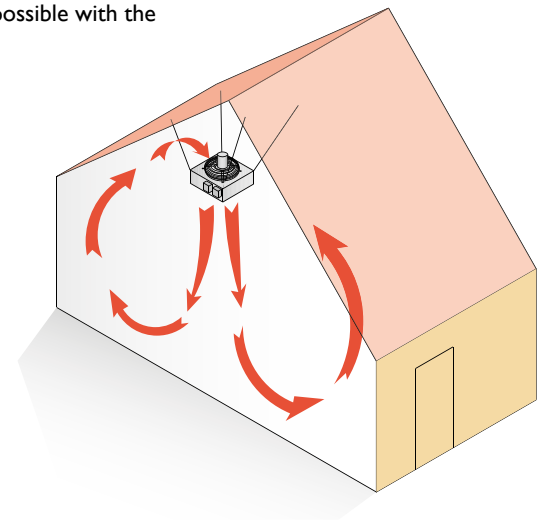

mark®

Dimensions

Type	W42	W82	W142
A	560	720	860
B	380	600	797
C	185	170	220
D	280	265	305

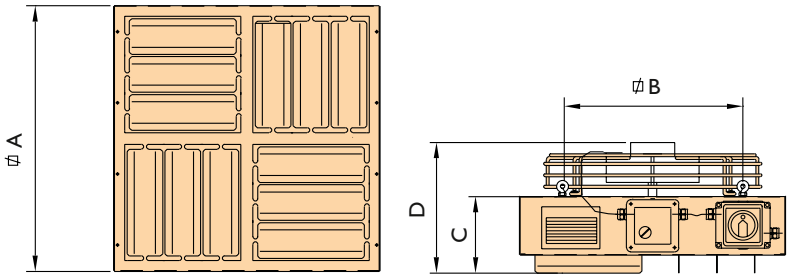

Assembly/location suggestions

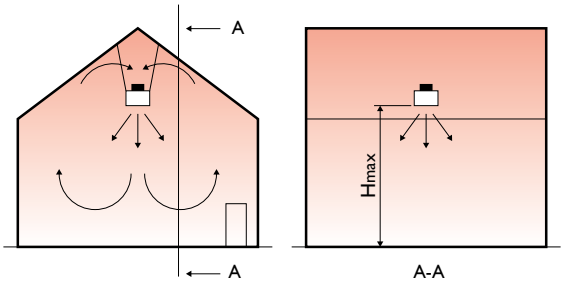

Technical information

Type		W42	W82	W142
Air displacement	m^3/h	4000	8000	14000
Motor rating AC-motor	W	150	360	535
Motor rating EC-motor	W	125	320	620
Consumed current AC-motor	A	0,65	1,7	2,5
Consumed current EC-motor	A	1,0	2,2	2,7
Motor speed AC-motor	min^{-1}	1050	1150	880
Motor speed EC-motor	min^{-1}	1400	1490	1000
Protection class of motor	IP	20	20	20
Supply voltage (50Hz)	V	1~230	1~230	1~230
Noise level	dB(A)	45	50	59
Weight	kg	18	24	34
Mounting height	m	4 - 8	7 - 13	10 - 18 - 30*
Covered m^2 per fan	m^2	400	625	900

* with cone

Controls

AC-motor

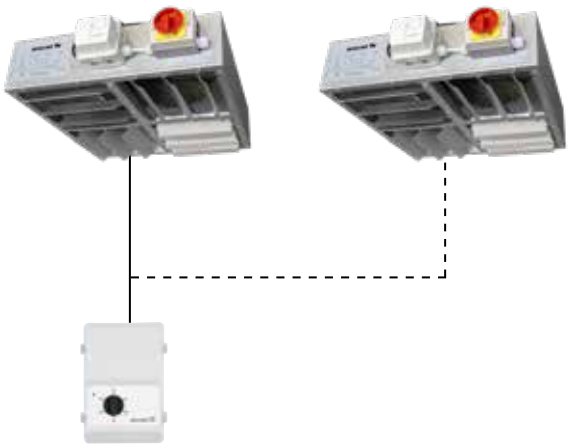

EC-motor

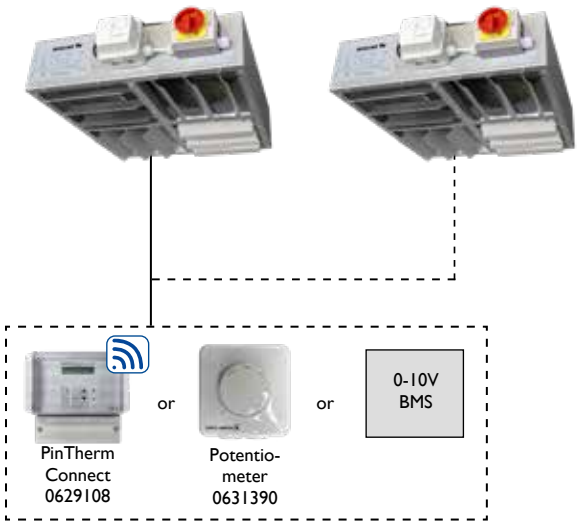

Prices Mark ECOFAN W42-W82-W142

PRODUCT - ECOFAN W-SERIE RECIRCULATION MODEL

Code nr.	Description	Price
5065005	ECOFAN W42, incl. thermostat and isolator switch, air displacement 4.000 m3/h	€ 735
5065010	ECOFAN W82, incl. thermostat and isolator switch, air displacement 8.000 m3/h	€ 874
5065012	ECOFAN W142, incl. thermostat and isolator switch, air displacement 14.000 m3/h	€ 1088

PRODUCT - ECOFAN W-SERIE RECIRCULATION MODEL WITH EC-MOTOR

Code nr.	Description	Price
5065003	ECOFAN W42 with EC-motor, incl. thermostat and isolator switch, air displacement 4.000 m3/h	€ 947
5065008	ECOFAN W82 with EC-motor, incl. thermostat and isolator switch, air displacement 8.000 m3/h	€ 1245
5065014	ECOFAN W142 with EC-motor, incl. thermostat and isolator switch, air displacement 14.000 m3/h	€ 1796

ACCESSORIES

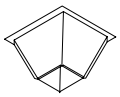

Code nr.	Description	Price
5064019	Destratification hood for type W142	€ 229

ACCESSORIES - CONTROL

Code nr.	Description	Price
0616186	Control panel, 5-step, 230V - 6,0A, for Ecofan W42-W82	€ 301
0616188	Control panel, 5-step, 230V - 12A, for Ecofan W42-W82	€ 560
0616189	Control panel, 5-step, 230V - 14A, for Ecofan W42-W82	€ 610
3003096	Control panel, 5-step, 230V - 6,0A, for Ecofan W142	€ 301
3003097	Control panel, 5-step, 230V - 12A, for Ecofan W142	€ 560
3003098	Control panel, 5-step, 230V - 14A, for Ecofan W142	€ 768
0629108	PinTherm Connect - programmable room thermostat with Ethernet and Modbus, 230V (4A)	€ 471
0631390	Potentiometer 10K with on/off contact IP54	€ 104
0629099	Destratification Regulator EDTR 6, 230V	€ 397

For function explanations see chapter on control

ACCESSORIES - ASSEMBLY

Code nr.	Description	Price
1999042	Suspension-set for W42, W82 en W142. 4 pieces of chain at 550 mm and 8 x carbine hook (5x50mm)	€ 61
0562043	Carabine Hooks	€ 1

ACCESSORIES - COLOURS **

Description	Price
ECOFAN W42 provided with colour	
Accessories ECOFAN W42 provided with colour 1 to 3 pieces (by piece)	€ 110
Accessories ECOFAN W42 provided with colour 4 to 10 pieces (by piece)	€ 95
Accessories ECOFAN W42 provided with colour for more than 10 pieces (by piece)	€ 70
ECOFAN W82 provided with colour	
Accessories ECOFAN W82 provided with colour 1 to 3 pieces (by piece)	€ 120
Accessories ECOFAN W82 provided with colour 4 to 10 pieces (by piece)	€ 105
Accessories ECOFAN W82 provided with colour for more than 10 pieces (by piece)	€ 75
ECOFAN W142 provided with colour	
Accessories ECOFAN W142 provided with colour 1 to 3 pieces (by piece)	€ 130
Accessories ECOFAN W142 provided with colour 4 to 10 pieces (by piece)	€ 115
Accessories ECOFAN W142 provided with colour for more than 10 pieces (by piece)	€ 80

REMARK

* W42 0,65A/230V, W82 1,7A/230V, W142 2,5A/230V

** These prices are only for the Mark standard RAL-colours: 3002 red, 1028 yellow, 6010 green, 7016 gray, 8014 brown, 9001 beige white, 5009 blue, 2009 orange, 1019 beige

ECOFAN P

CEILING FAN

Silent and low maintenance air distributor

The ECOFAN P140 is particularly suited to better distributing hot air in a room. Achieving better distribution of air can reduce heating bills.

The ceiling fan is supplied without a position control. A reverse operating thermostat can also be supplied as an option so that the unit is switched on automatically if the temperature below the ceiling rises.

The ECOFAN P140 can, if desired, also be placed in low spaces thanks to a supplied rod of 150 mm.

Possible applications include: factories, schools, churches, shops and offices.

Features of the Mark ECOFAN P
- Large air displacement
- Supplied in RAL 9010 colour as standard
- Low noise
- Efficient
- Equipped with safety cord

Dimensions

		P140
A	mm	610
B	mm	1400

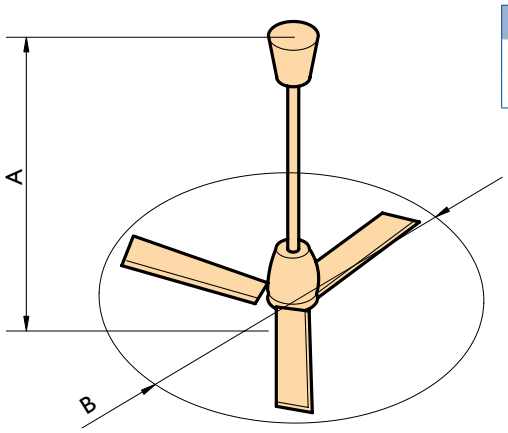

mark®

Technical information

Type		P140
Air displacement	m^3/h	22.000
Motor rating	W	67
Consumed current	A	0.30
Motor speed	min^{-1}	290
ø Fan	mm	1400
Supply voltage (50Hz)	V	1~230
Weight	kg	5,0
Suspension height	m	4-9

Number of fans
- Number of fans per 1000 m^2: 12
- Covered m^2 per fan: 83

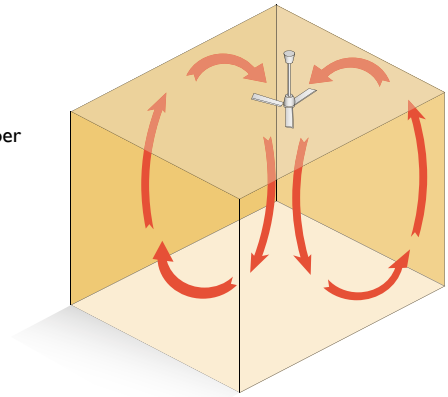

Controls

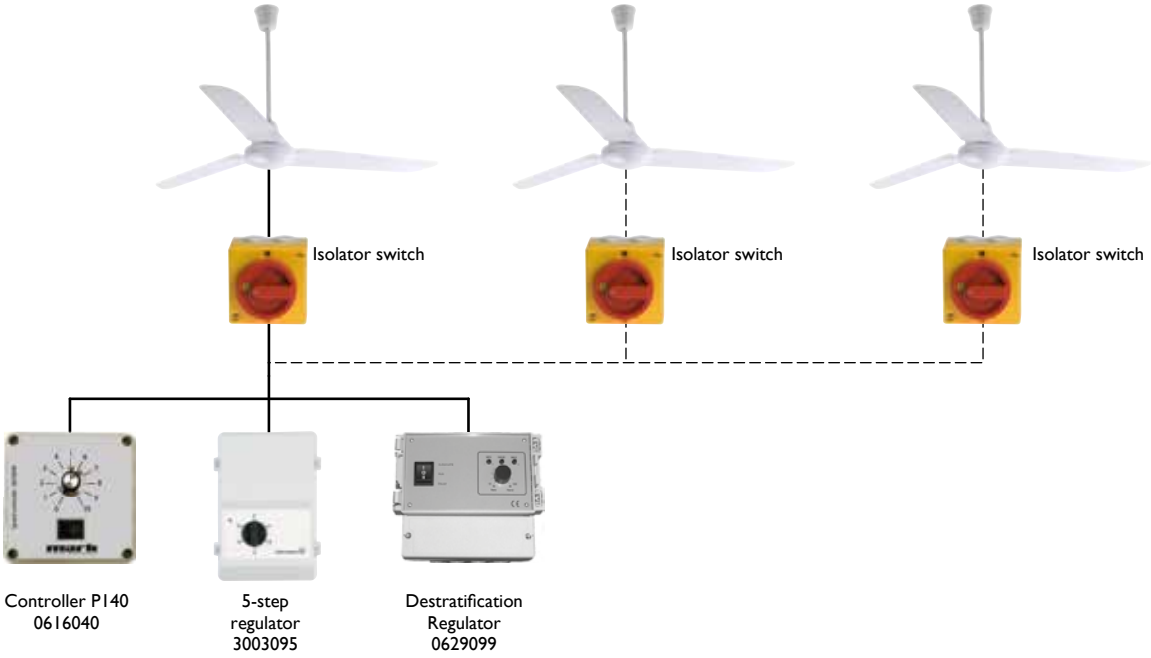

Price ECOFAN P

PRODUCT - ECOFAN P CEILING FAN

Code nr.	Description	Price
5990814	ECOFAN P140, air amount 22000 m3/h	€ 241

ACCESSORIES - CONTROL

Code nr.	Description	Price
0629013	Room thermostat (4A)	€ 51
0631162	Isolator switch, separate delivery, 230 Volt (2 poles)	€ 56
0616186	5-step regulator, 230V-6,0A*	€ 301
3003095	Destratification Regulator EDTR 6, 230V	€ 397
0616040	Controller P140 for 9 fans	€ 110

For function explanations see chapter on controls

REMARKS

* More than one fans connected on the regulator

MDV BLUE

ROOF FAN

Sustainable and efficient air extraction

The Mark MDV BLUE roof fan is suitable for extracting air from buildings and features the latest developments in the field of fans, including the efficient EC technology. This guarantees a very low power consumption combined with excellent performance.

The MDV BLUE roof fan is available in various sizes and air displacements varying from 300 m³/h to 15.000 m³/h. The unit is supplied with a radial fan. The casing is made of sendzimir plate.

The MDV BLUE can be used in factories, welding areas, offices and supermarkets.

Features
- Sharp pricing
- EC technology
- Reliable
- High efficiency
- Meets EU 1253/2018
- 300 m³/h to 15.000 m³/h
- Low maintenance
- Good chemical resistance
- Complete BMS integration possible

Option
- Aluminum casing seawater resistant AlMg3
- Controls: i.a. constant pressure, 0-10V, presence control, CO_2 control, humidity control and temperature control.

Remote connection possible with the PinTherm Connect!

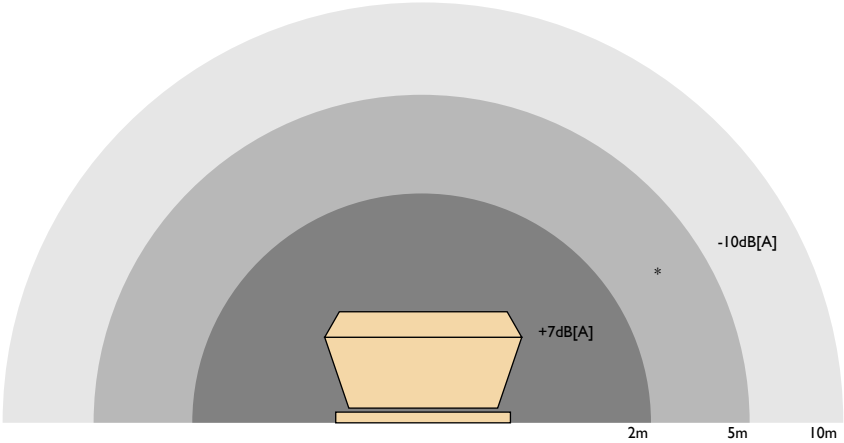

Dimensions

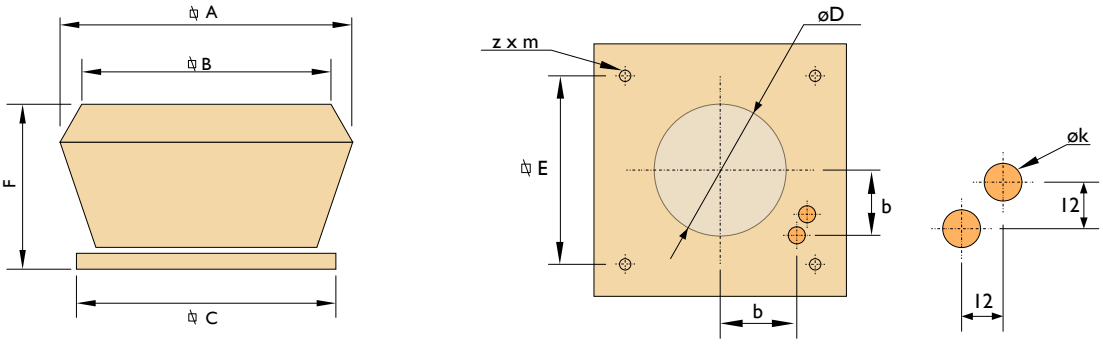

Type	A	B	C	D	E	F	b	z x m	øk
MDV Blue 225	514	430	435	200	330	277	115	4 x ø9	20
MDV Blue 355	715	590	595	290	450	365	160	4 x ø12	20
MDV Blue 400	715	590	595	365	450	365	160	4 x ø12	20
MDV Blue 450	880	660	665	410	535	480	220	4 x ø12	20
MDV Blue 500	870	720	723	450	590	480	245	4 x ø12	20
MDV Blue 560	1135	935	939	510	750	570	250	4 x ø12	20
MDV Blue 630	1135	935	939	550	750	570	260	4 x ø12	20

These dimensions are for both the MDV Blue AC and MDV Blue EC.

Technical information

MDV Blue EC		225	355	400	450AC	450EC	500	630
Supply voltage (50Hz)	V	230	230	230	230	230	400	400
Nominal air flow	m^3/s	0,25	0,56	1,16	1,69	1,61	2,50	3,89
Nominal power consumption	kW	0,07	0,15	0,26	1,1	0,32	0,82	1,40
SFP nominal	$W/m^3/s$	277	275	228	651	199	330	362
Nominal air velocity	m/s	6,69	13,37	16,73	19,70	18,73	23,77	24,03
Nominal pressure	Pa	72	105	120	182	120	142	178
Stat. efficiency fan	%	26,0	38,2	52,7	27,96	60,4	43,1	49,2
Noise level (5m)*	dB(A)	63	65	63	69	67	72	72
Maximum air flow	m^3/h	1200	3150	4300	6500	5300	10750	15000
Consumed current	A	1,4	2,2	3,0	5,2	2,2	4,0	4,2
Weight	kg	16	32	35	48	48	62	100
Protection class	IP	54	54	54	54	54	54	54

Thermal efficiency: Not applicable
HRS: None
Category: NRVU
Operating temperature: -20 / +60 °C

Accessories – additional sections

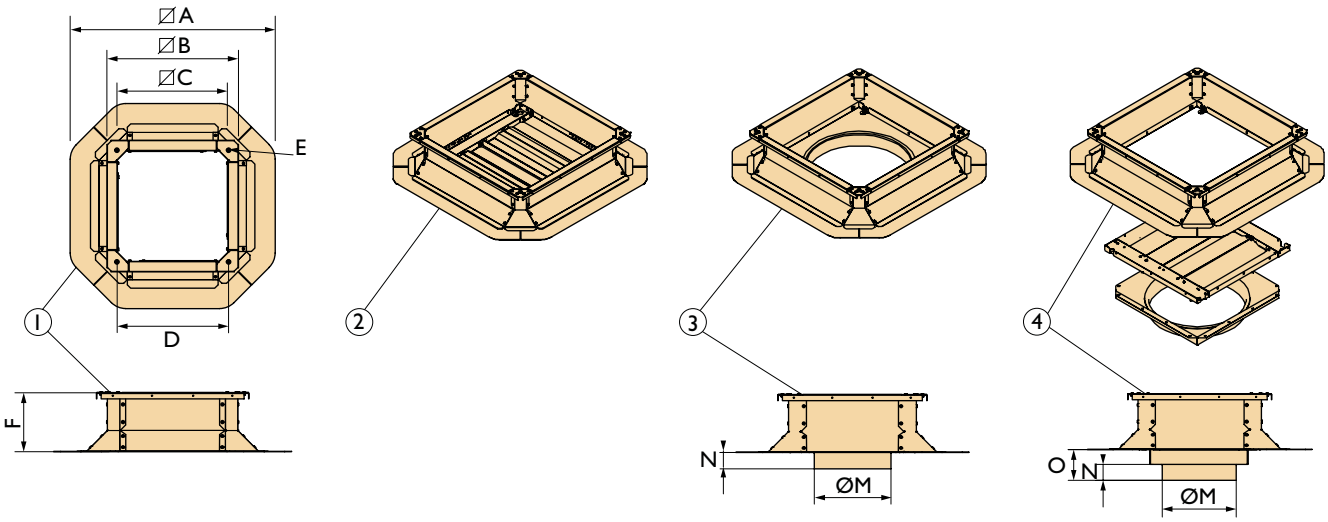

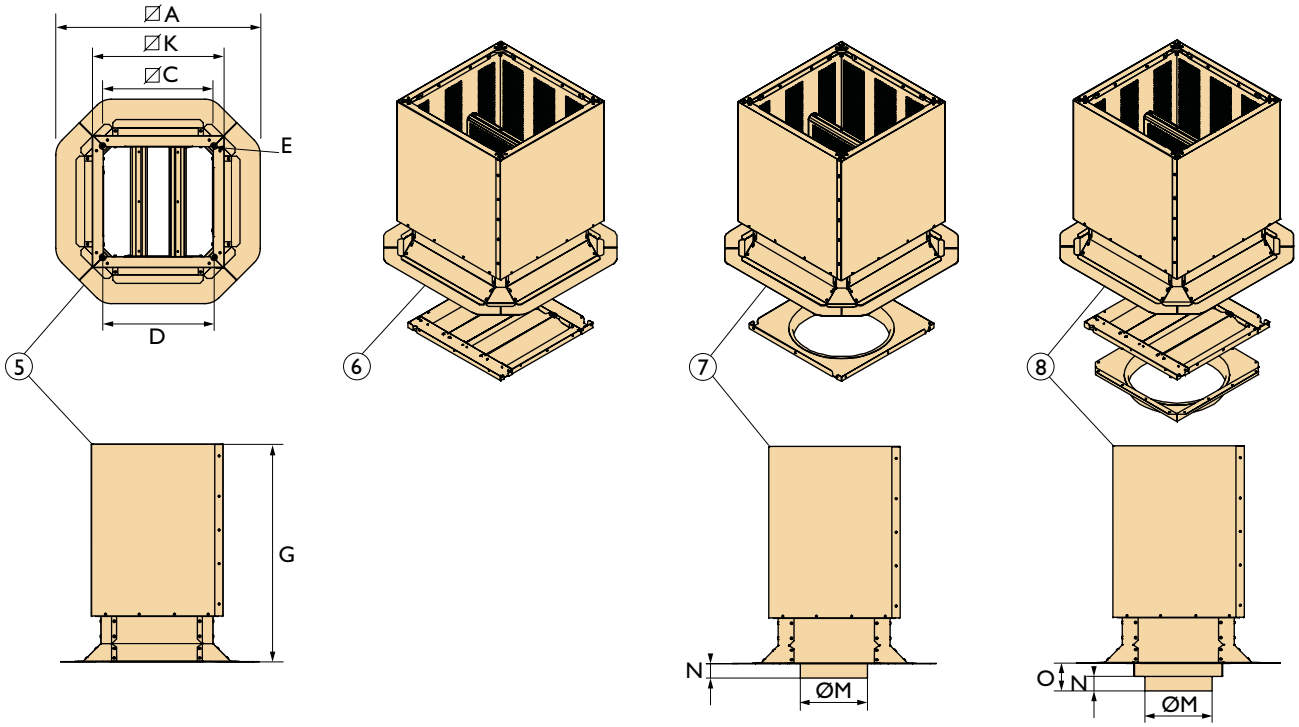

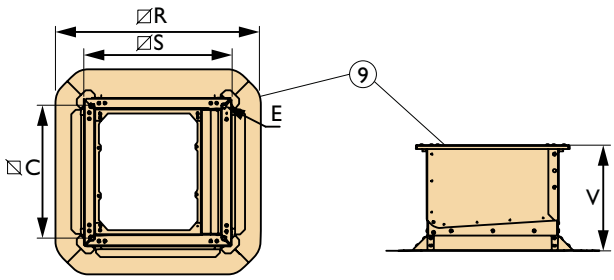

1 Roof curb
2 Roof curb with self-closing valve
3 Roof curb with round fitting
4 Roof curb with self-closing valve and round fitting
5 Roof curb with silencer*
6 Roof curb with silencer and self-closing valve
7 Roof curb with silencer and round fitting
8 Roof curb with silencer, self-closing valve and round fitting
9 0-30° adjustable roof curb

* silencer is also available seperately, price on request.
attenuation value 9 dB(A)

Dimensions (mm) belonging to page 128

Type	A	B	C	D	E	F	G	K	M	N	O	R	S	V
225	610	390	328	320	M8	150	648	392	200	43	83	515	372	255
355/400	728	510	448	450	M10	150	733	514	355	53	93	635	490	316
450	815	600	533	530	M10	150	733	598	400	53	93	720	575	372
500	870	650	588	585	M10	150	698	656	450	53	93	775	630	372
630	1030	810	748	745	M10	150	698	816	600	63	103	934	790	341

Weights (kg)

Type	225	355/400	450	500	630
Roof curb	6,3	8,4	9,9	10,9	13,7
Roof curb with self-closing valve	7,6	10,4	12,5	13,8	18,2
Roof curb with round fitting	7,8	10,4	12,7	14,0	18,1
Roof curb with self-closing valve and round fitting	8,4	11,0	14,2	15,8	21,1
Roof curb with silencer	19,6	29,2	33,1	37,4	46,6
Roof curb with silencer and self-closing valve	20,8	31,1	35,7	40,3	51,2
Roof curb with silencer and round fitting	21,1	31,2	35,8	40,6	51
Roof curb with silencer, self-closing valve and round fitting	21,7	32,3	37,4	42,3	54,1
0-30° adjustable roof curb	6,6	10	13,5	15	18

Assembly/location suggestions

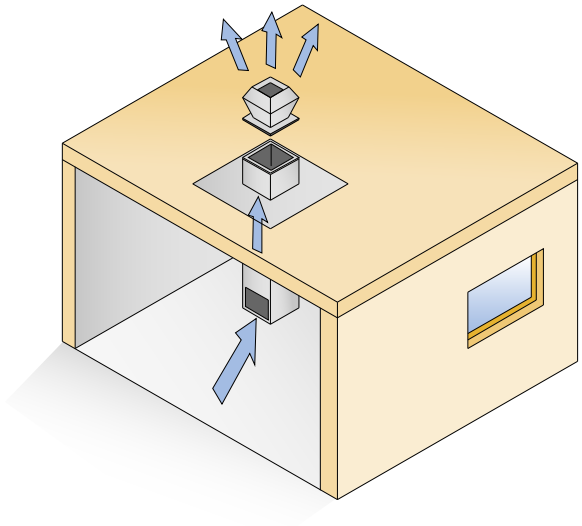

MDV with sound absorbing plate

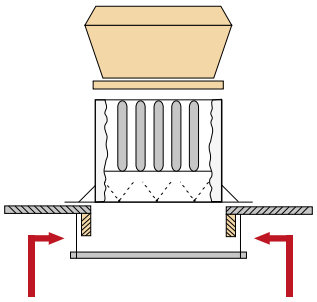

MDV with duct connection

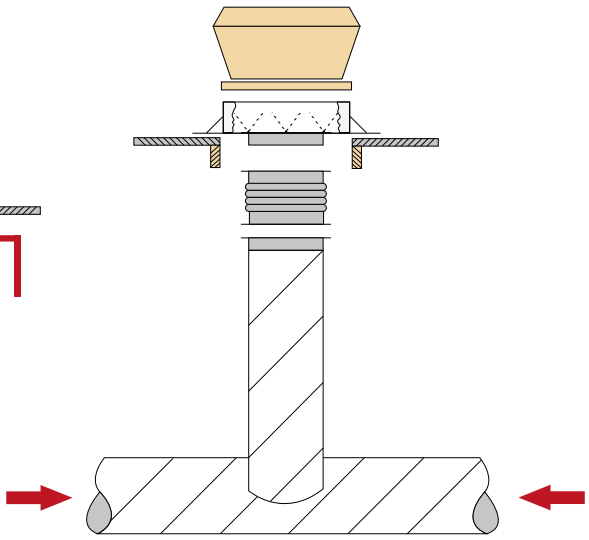

AC or EC?

	AC	EC
Meaning	Alternating current	Electronically commuted (changed)
Efficiency	General lower than EC	Higher, especially at partial load
Variable speed	Additional equipment needed*	Integrated
Control	External additional devices	0-10 V and commonly modbus
Running costs	Higher	Lower
Investment costs	Lower	Higher
EU1253 complying?	Yes, with variable speed drive	Yes

* Speed control with transformer, inverter and step less dimmer.

Controls

MDV Blue AC

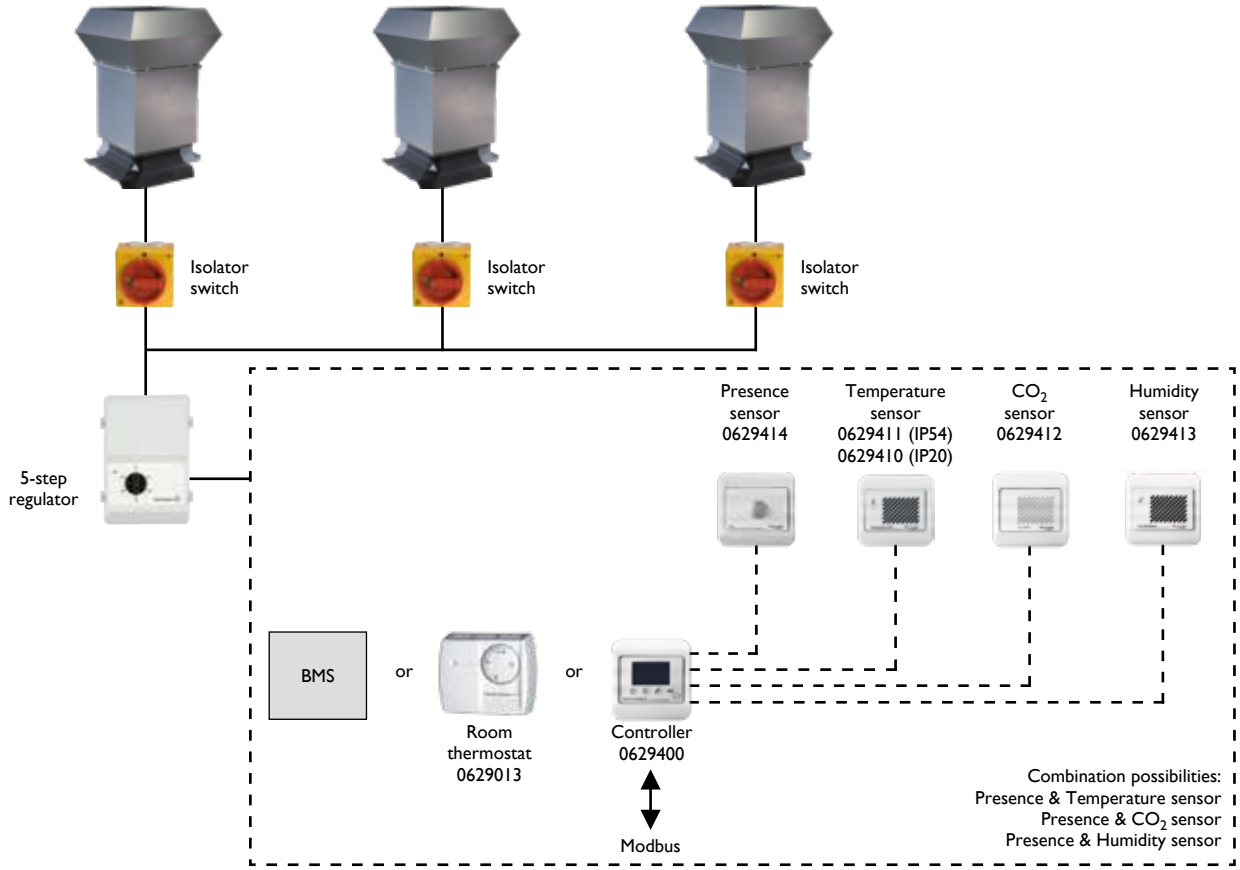

MDV Blue EC

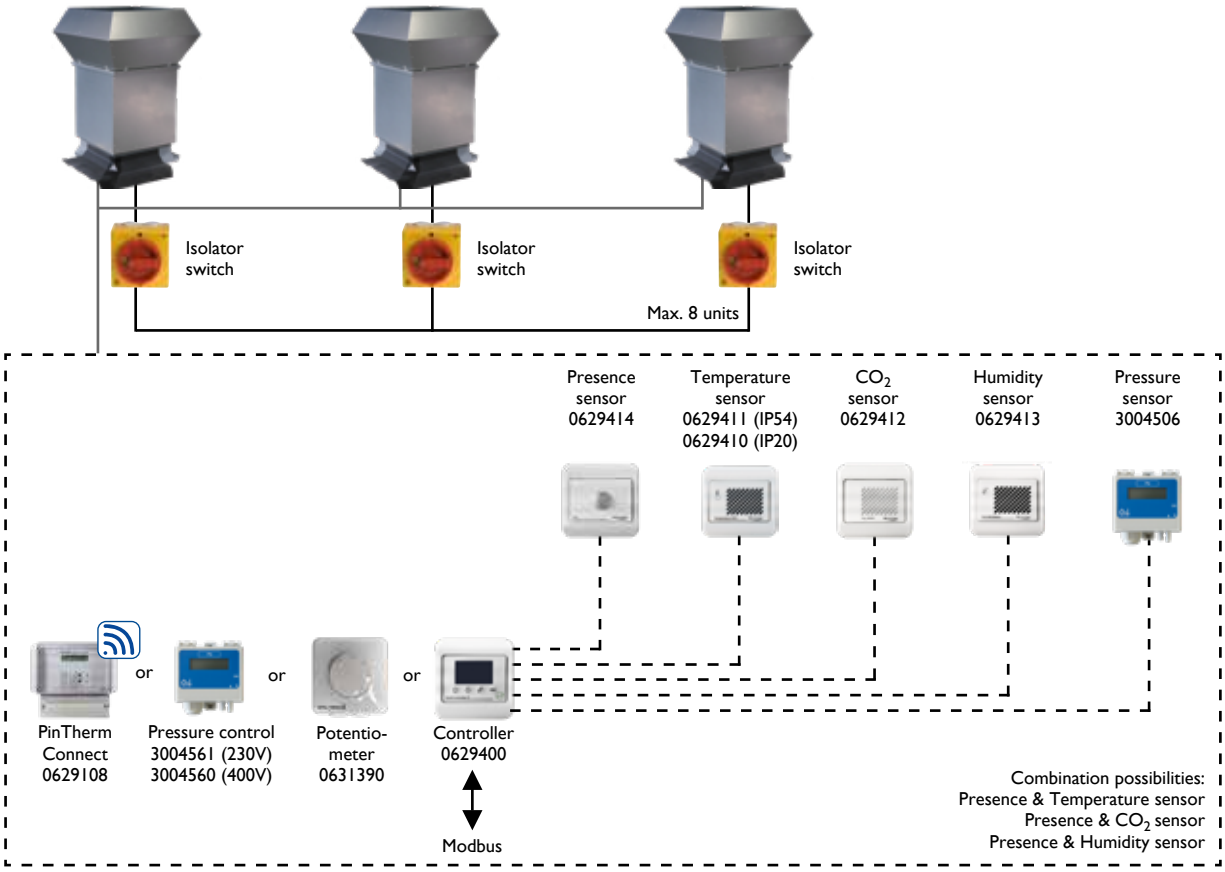

Prices Mark MDV Blue

PRODUCT - MDV BLUE AC ROOF FAN

Code nr.	Description	Price
3182015	MDV Blue AC 450 L1, Roof fan, 230V	€ 1441

PRODUCT - MDV BLUE EC ROOF FAN

Code nr.	Description	Price
3182007	MDV Blue EC 225, Roof fan, 230V	€ 788
3182001	MDV Blue EC 355, Roof fan, 230V	€ 1326
3182002	MDV Blue EC 400, Roof fan, 230V	€ 1764
3182003	MDV Blue EC 450, Roof fan, 230V	€ 1934
3182004	MDV Blue EC 500, Roof fan, 400V	€ 2402
3182006	MDV Blue EC 630, Roof fan, 400V	€ 2679

ACCESSORIES - ADDITIONAL SECTIONS

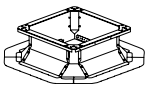

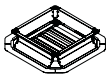

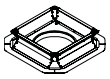

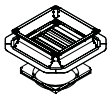

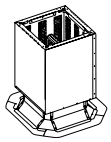

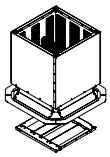

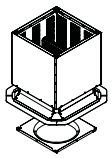

Code nr.	Description	Price
3074470	Roof curb for MDV 225	€ 153
3074471	Roof curb for MDV 355/400	€ 199
3074473	Roof curb for MDV 450	€ 223
3074475	Roof curb for MDV 500	€ 243
3074476	Roof curb for MDV 630	€ 252
3182060	Roof curb with self-closing valve for MDV 225	€ 308
3182061	Roof curb with self-closing valve for MDV 355/400	€ 314
3182063	Roof curb with self-closing valve for MDV 450	€ 396
3182065	Roof curb with self-closing valve for MDV 500	€ 418
3182066	Roof curb with self-closing valve for MDV 630	€ 440
3182050	Roof curb with round fitting for MDV 225	€ 280
3182051	Roof curb with round fitting for MDV 355/400	€ 295
3182053	Roof curb with round fitting for MDV 450	€ 329
3182055	Roof curb with round fitting for MDV 500	€ 361
3182056	Roof curb with round fitting for MDV 630	€ 365
3182070	Roof curb with self-closing valve and round fitting for MDV 225	€ 396
3182071	Roof curb with self-closing valve and round fitting for MDV 355/400	€ 413
3182073	Roof curb with self-closing valve and round fitting for MDV 450	€ 506
3182075	Roof curb with self-closing valve and round fitting for MDV 500	€ 539
3182076	Roof curb with self-closing valve and round fitting for MDV 630	€ 570
3182024	Roof curb with silencer for MDV 225	€ 448
3182025	Roof curb with silencer for MDV 355/400	€ 596
3182027	Roof curb with silencer for MDV 450	€ 673
3182029	Roof curb with silencer for MDV 500	€ 723
3182030	Roof curb with silencer for MDV 630	€ 785
3182110	Roof curb with silencer and self-closing valve for MDV 225	€ 602
3182111	Roof curb with silencer and self-closing valve for MDV 355/400	€ 711
3182113	Roof curb with silencer and self-closing valve for MDV 450	€ 846
3182115	Roof curb with silencer and self-closing valve for MDV 500	€ 896
3182116	Roof curb with silencer and self-closing valve for MDV 630	€ 965
3182100	Roof curb with silencer and round fitting for MDV 225	€ 574
3182101	Roof curb with silencer and round fitting for MDV 355/400	€ 693
3182103	Roof curb with silencer and round fitting for MDV 450	€ 779
3182105	Roof curb with silencer and round fitting for MDV 500	€ 840
3182106	Roof curb with silencer and round fitting for MDV 630	€ 888

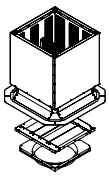

3182120	Roof curb with silencer, self-closing valve and round fitting for MDV 225	€	672
3182121	Roof curb with silencer, self-closing valve and round fitting for MDV 355/400	€	794
3182123	Roof curb with silencer, self-closing valve and round fitting for MDV 450	€	938
3182125	Roof curb with silencer, self-closing valve and round fitting for MDV 500	€	999
3182126	Roof curb with silencer, self-closing valve and round fitting for MDV 630	€	1074
5064230	Noise reduction plate for MDV 225	€	127
5064231	Noise reduction plate for MDV 355/400	€	145
5064232	Noise reduction plate for MDV 450/500	€	151
5064233	Noise reduction plate for MDV 630	€	191

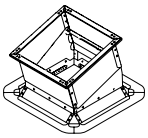

3074478	Adjustable (0-30°) roof curb for MDV 225	€	401
3074479	Adjustable (0-30°) roof curb for MDV 355/400	€	432
3074481	Adjustable (0-30°) roof curb for MDV 450	€	475
3074482	Adjustable (0-30°) roof curb for MDV 500	€	481
3074483	Adjustable (0-20°) roof curb for MDV 630	€	564

ACCESSOIRES - CONTROLS

Code nr.	Description		Price
0616162	Control box, 5-steps, 400V - 2,0A	€	669
0616164	Control box, 5-steps, 400V - 4,0A	€	935
0616166	Control box, 5-steps, 400V - 7,0A	€	1108
0616186	Control box, 5-steps, 230V - 6,0A	€	301
0616188	Control box, 5-steps, 230V - 12,0A	€	560
0616189	Control box, 5-steps, 230V - 14,0A	€	610
0629108	PinTherm Connect - programmable room thermostat with Ethernet and Modbus, 230V (4A)	€	471
0631352	Speed controller LT6 0-10V for MDV Blue AC	€	272
0629400	Multi Controller E regulate 230V	€	441
0629410	Room temperature sensor IP20	€	155
0629411	Room temperature sensor IP54	€	96
0629412	Room CO2 sensor	€	382
0629413	Room humidity sensor	€	246
0629414	Presence sensor	€	168
0631390	Potentiometer 10K with on/off contact IP54	€	104
3004506	Pressure sensor	€	218
3004561	Constant pressure control 230V	€	291
3004560	Constant pressure control 400V	€	226
0631163	Isolator switch 4 poles 230V, separate delivery	€	64
0631167	Isolator switch 8 poles 400V, separate delivery	€	81
5017098	Isolator switch 4 poles 230V, pre-wired	€	111
5017099	Isolator switch 8 poles 400V, pre-wired	€	150

For function explanation see chapter on control

Low noise ventilation boxes

A complete range of centrifugal ventilation units of very low noise level. The supply and extract fans are fitted in a solid casing, versatile and easy to mount. The casing is made of aluminium or galvanised steel with a 50 mm layer of mineral wool, that insulates from noise and external temperature.

Features
- Galvanized steel or aluminium.
- Double inlet centrifugal fans with forward-curved impellers, backward impeller, EC fan, easy to connect to spiral ducts using mounting clamps.
- Integrated thermal-contacts that protect the motors from overheating with lead for connection to a motor protection device.
- Maintenance-free external rotor motors.
- External terminal box.

BD Box Supply/Return Fan
Belt driven centrifugal fan in soundproof cabinet.

BD Twinbox Supply/Return Fan
Belt driven centrifugal in soundproof cabinet.

DDF Kitchen Extract Fan
Simple inlet forward impeller fan.

BD SS Supply/Return Fan
Box fan with backward impeller and belt transmission - F400-120.

TF Inline (EC) Fan
The TF and TF EC is an in-line centrifugal duct fan with high capacity and excellent reliability.

TANNER MDC

WATER-SUPPLIED AIR HEATER

Versatile hot water air heater with centrifugal fan

The TANNER MDC is a water-supplied suspended air heater which can expel air horizontally or vertically.
The unit has a powerful centrifugal fan which means it is suitable for many applications. Mark offers a highly extensive range of accessories for the TANNER MDC allowing it to be aligned to specific client requirements.
For example, the unit can be made suitable for external air connection in combination with filtering and a mixing box for the destratification of fresh external air. The MDC is highly suitable for connection to a duct system.

The MDC is designed for use in showrooms, changing rooms, corporate hallways and garages.

Features:
- Manufactured with a corrosion-resistant aluzinc housing as standard
- Copper/aluminium heat exchanger
- Highly versatile due to extensive configuration options
- Available as 230V or 400V

Optional
EC-motor (230V / 0-10V), advantages of which are:
- The highest efficiency in case of speed control
- Up to 50% energy saving in case of partial load
- Almost completely linearly adjustable
- Long lifetime
- Low noise level
- Integrated electronic thermal protection

Remote connection possible with the PinTherm Connect!

Dimensions

T	A	B	C	D
	mm	mm	mm	mm
100	390	415	443	583
200	520	545	573	713
300	670	595	723	863
400 1.1 kW	800	835	853	993
400 1.5 kW	800	835	853	993
400 2.2 kW	800	835	853	993
400 3.0 kW	800	835	853	993

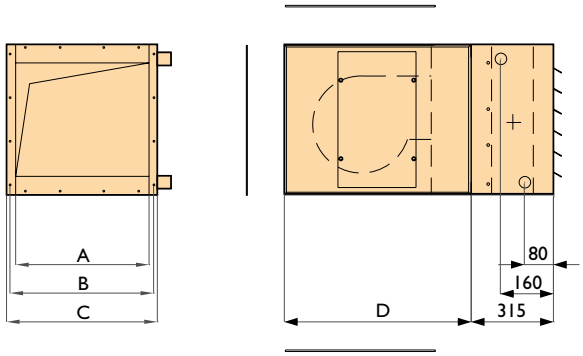

Technical information

Type		100	200	300	400	400	400	400
Air displacement minimum	m^3/h	1.000	2.000	2.500	4.000	4.000	4.000	4.000
Air displacement maximum	m^3/h	2.500	3.600	5.400	7.000	<7.800	<8.800	<9.300
External pressure maximum	Pa	300	380	250	400	400	420	420
Noise level (5m)	dB(A)	53	53	53	58	58	64	70
Supply voltage (50Hz)	V	1~230V	1~230V	1~230V	3~400V+N	3~400V+N	3~400V+N	3~400V+N
Motor	kW	0,42	0,55	0,75	1,1	1,5	2,2	3
Consumed current	A	3,1	6,7	7,0	2,8	3,7	5	6,9

See MDA tables on pages 46/47 for heat delivery.

TYPE DESIGNATION

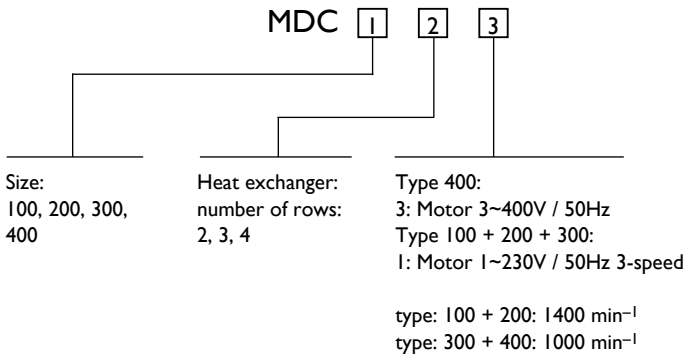

Accessories – additional sections

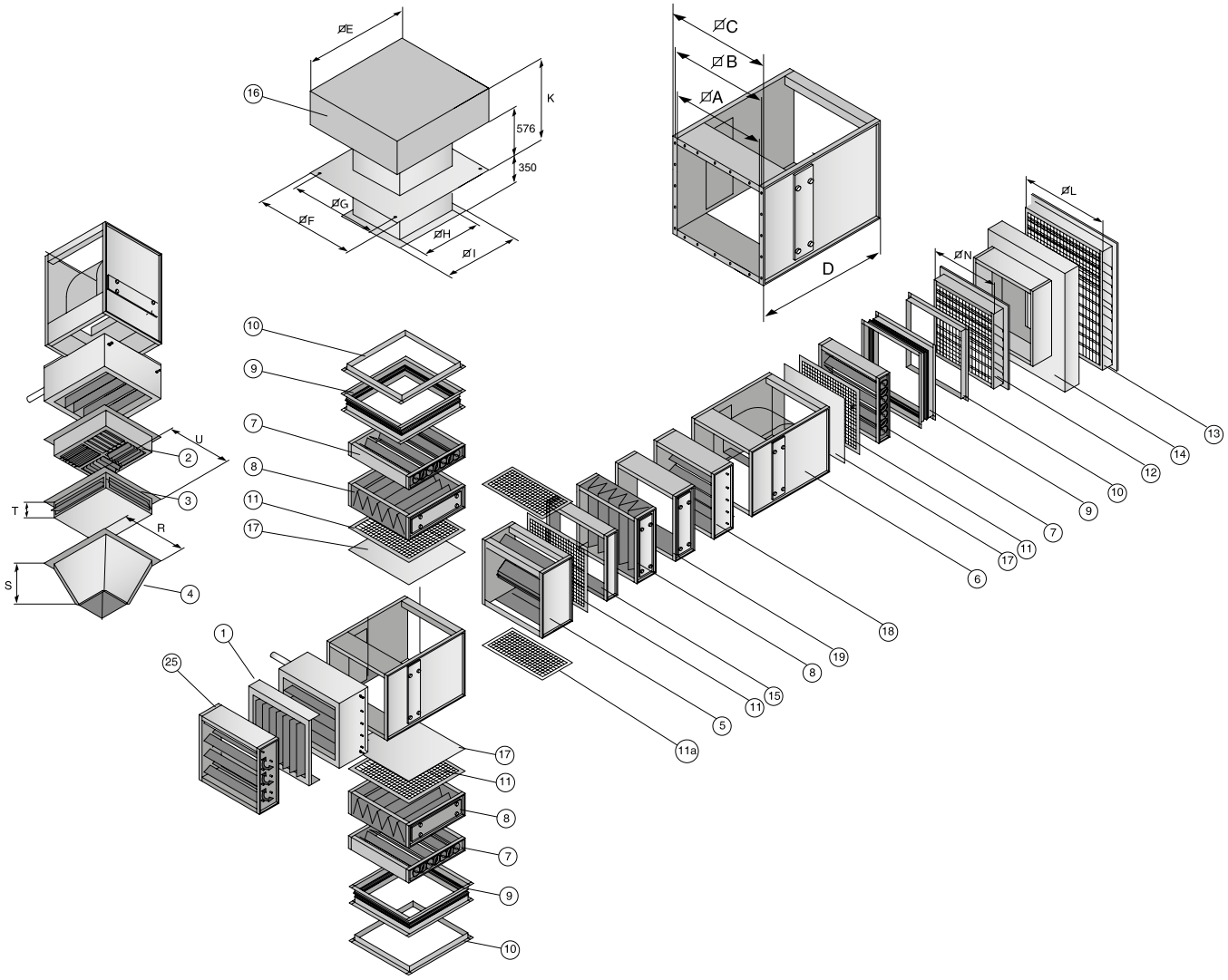

Type	A	B	C	D	E	F	G	H
100	390	415	443	463	690	740	690	380
200	520	545	573	593	920	920	820	510
300	670	695	723	743	1180	1240	975	665
400	800	835	853	873	1420	1240	1110	800

Type	I	K	L	N	R	S	T	U
100	440	800	516	386	439	212	120	406
200	570	895	666	516	573	253	151	530
300	720	940	796	666	724	300	175	680
400	850	1075	1005	796	853	329	220	815

Position	Description
1	Vertical louvres
2	Downflow hood 4-sided vertical
3	Downflow hood 4-sided horizontal
4	Destratification hood
5	Mixing box incl. dampers
6	Mixing box for dampers
7	Damper
8	Filter box with filter (EU 3)
9	Flexible connection
10	Corner profile
11	Mesh
11a	Mesh
12	Weather grill ≤ 50% fresh air intake
13	Weather grill > 50%-100% fresh air intake
14	Transition piece for 13
15	Empty section 120 mm
16	Rain cap incl. adhesive plate (aluminium)
17	Blanking plate
18	Motor protection strip
19	Empty section 240 mm
25	Induction damper

Assembly/location suggestions

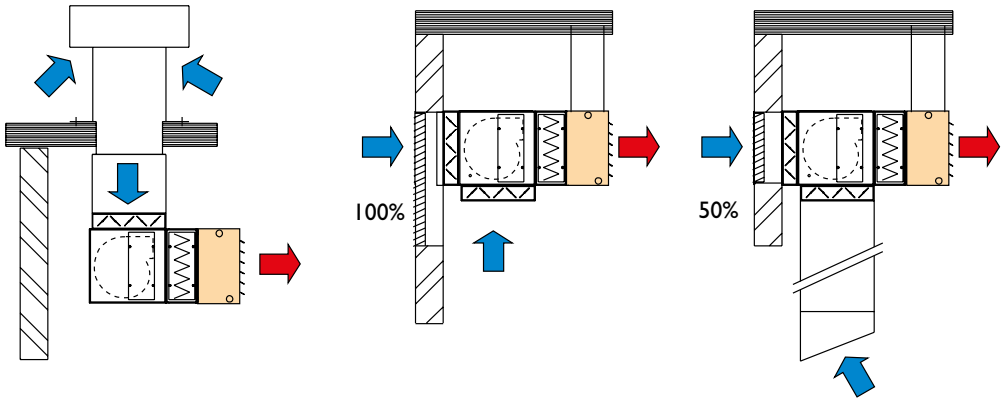

Controls

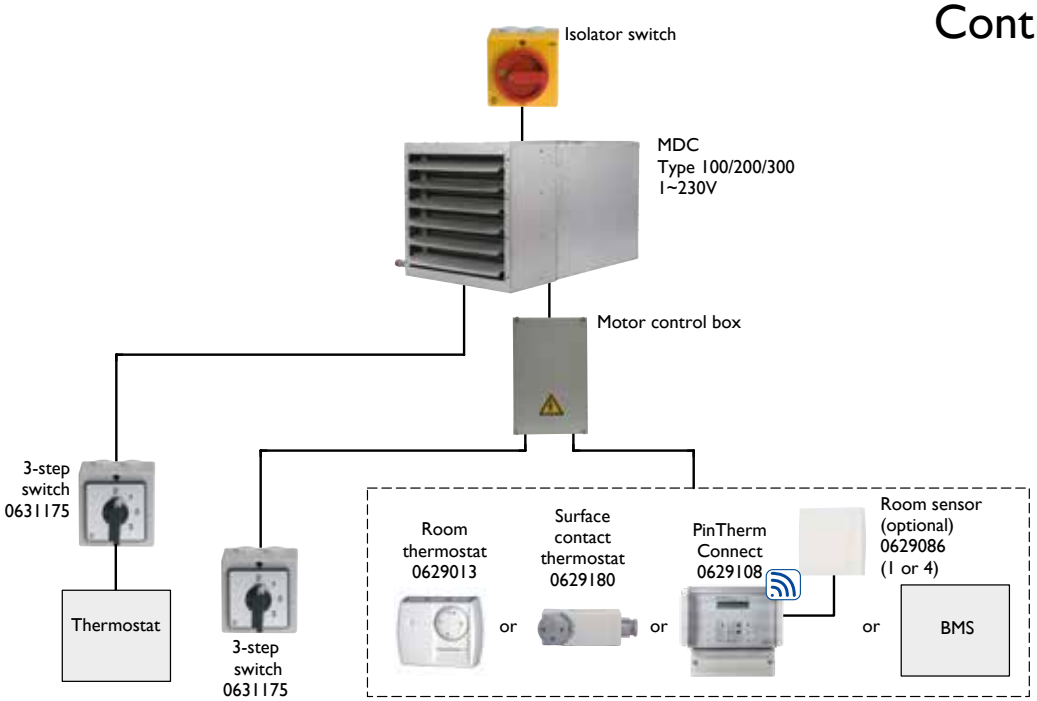

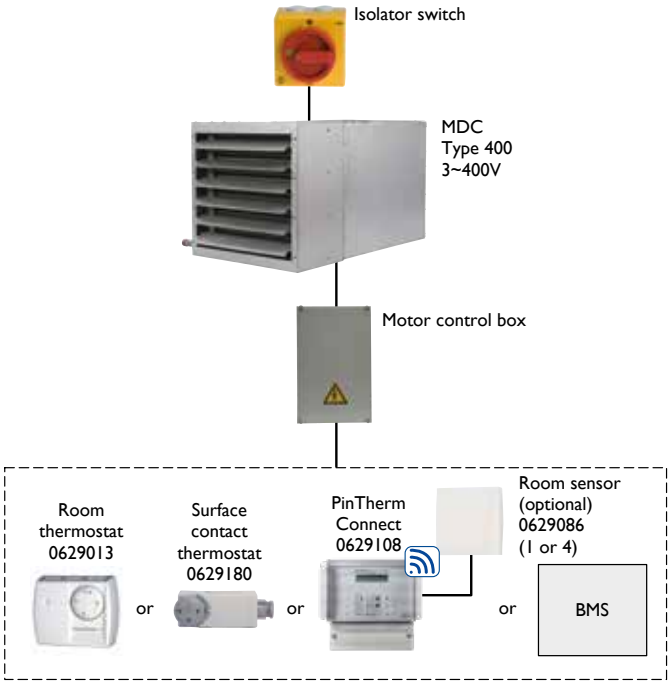

Plug & play heat recovery unit

Increasingly high demands are being placed on the air quality in buildings. Multiple ventilation is often needed in order to comply with these demands. A great deal of energy is lost when standard ventilation equipment is used. To counter the loss of energy, Mark has included a heat recovery unit, the AIRSTREAM, in its product range. The unit has an efficiency upto 90%. This means that 90% of the energy expelled is supplied to the fresh intake air. This high-efficiency means that in many cases no after-heating is required.

The AIRSTREAM heat recovery unit is available in two versions for both indoor and outdoor installation. The AIRSTREAM CFX is equipped with a certified high-efficiency counterflow heat exchanger with bypass. The AIRSTREAM HWX is equipped with a corrosion-resistant rotary heat exchanger.

Possible applications for the AIRSTREAM include offices, schools, workshops and changing areas.

Features:
- Efficiency > 90%
- Air amounts between 600-45000 m³/h
- 45 mm environmentally friendly foam sandwich panel
- The outer panelling consists of galvanized plate coated in RAL 9002 (white - grey)
- The internal panelling is made of Aluzinc AZ 185 with a C4 corrosion resistance
- Thermal-bridge-free cabinet construction with aluminum profiles
- Seamless connection of the panels to the inside with rubber seal (hygienic)
- High external pressure possible
- Removable doors
- Indoor and outdoor installation
- Low noise level
- Plug & Play-version
- Supplied pre-assembled
- Various construction types possible as standard as well as specials on request
- Plug Fans equipped with energy-saving EC-motors
- Certification according to Eurovent and RLT Richtlinie-01

Optional:
- Pre- and after-heating: electric, gas, water, change-over
- Cooling coil
- Heat pump
- Indirect adiabatic cooling

For more information please see our technical brochure on www.markclimate.com

mark®

EUROVENT CERTIFIED PERFORMANCE
CERTIFICATION N°: 17.07.011
AIRSTREAM
www.eurovent-certification.com

Energieeffizienzklasse A+
nach RLS-Richtlinie 01
RLT

Dimensions

Airstream CFX*

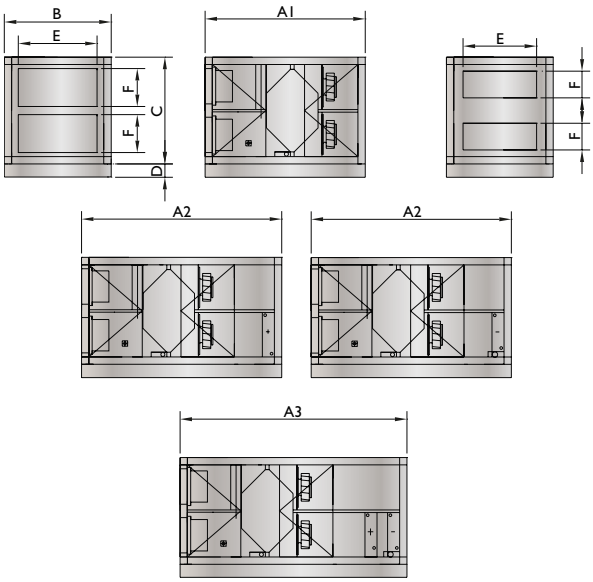

Airstream CFX with external air valve and return valve*

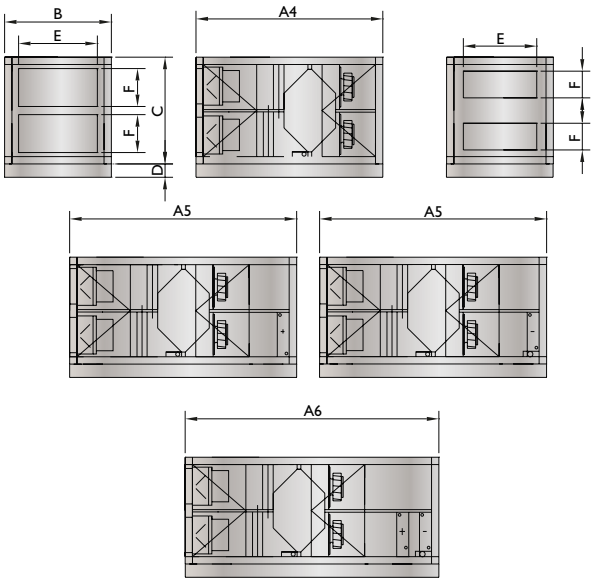

A1	Airstream CFX
A2	Airstream CFX with after-heater or cooler
A3	Airstream CFX with after-heater and cooler
A4	Airstream CFX with external air valve
A5	Airstream CFX with external air valve, after-heater or cooler
A6	Airstream CFX with external air valve, after-heater and cooler

T	A1	A2	A3	A4	A5	A6	B	C	D	E	F
600	1700	2000	2200	1900	2200	2400	1000	900	100	565	265
1400	1800	2100	2300	2000	2300	2500	1100	1150	100	565	265
2000	2000	2300	2500	2200	2500	2700	1050	1150	100	565	265
3200	2100	2400	2600	2300	2600	2800	1300	1400	100	565	465
4000	2200	2500	2700	2400	2700	2900	1400	1400	100	865	465
5400	2500	2800	3000	2700	3000	3200	1500	1700	100	1155	465
6400	2600	2900	3100	2800	3100	3300	1700	1750	100	1155	565
8600	2700	3000	3200	2900	3200	3400	2400	1750	180	1455	565
10000	3000	3300	3500	3200	3500	3700	2050	1950	180	1455	565
12500	3100	3400	3600	3300	3600	3800	2500	2000	180	2030	565
15200	3600	3900	4100	3800	4100	4300	2300	2700	180	1755	865
20000	3700	4000	4200	3900	4200	4400	2950	2700	180	2030	865

* Optional change of airflow

Optional: heat pump

Airstream HWX*

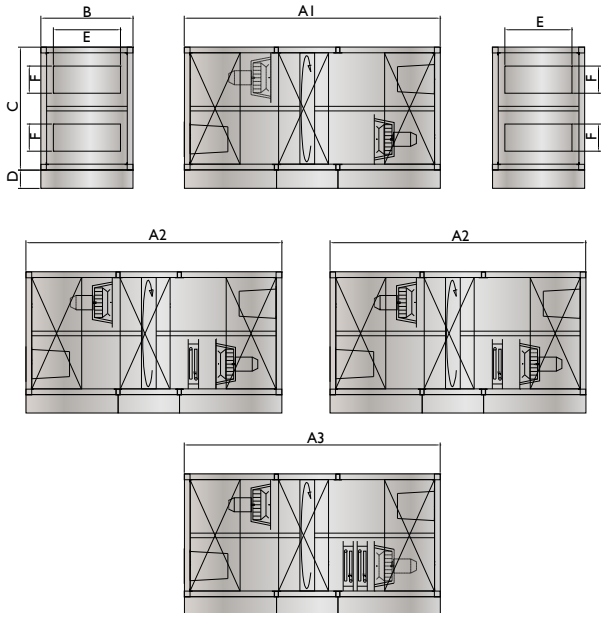

Airstream HWX with external air valve*

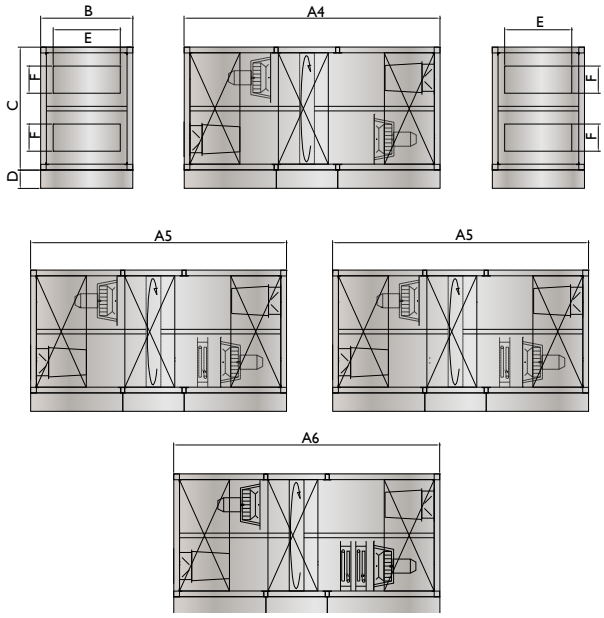

Airstream HWX with external air valve and recirculation valve*

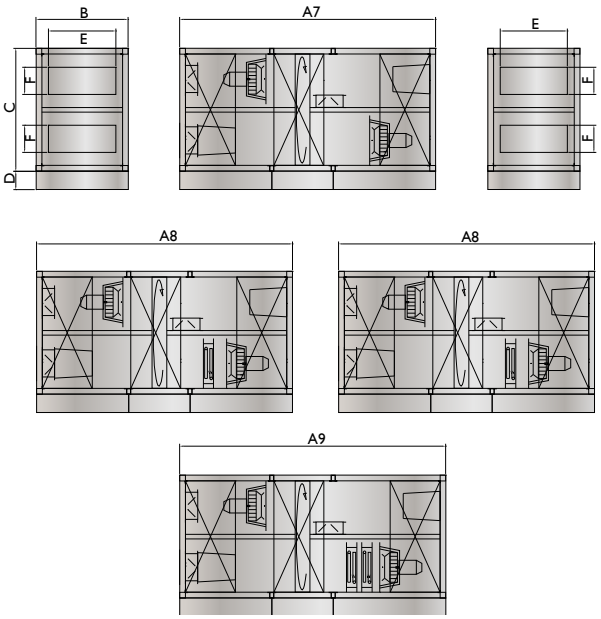

A1	Airstream HWX
A2	Airstream HWX with after-heater or cooler
A3	Airstream HWX with after-heater and cooler
A4	Airstream HWX with external air valve
A5	Airstream HWX with external air valve, after-heater or cooler
A6	Airstream HWX with external air valve, after-heater and cooler
A7	Airstream HWX with external air valve and recirculation valve
A8	Airstream HWX with external air valve, recirculation valve, after-heater or cooler
A9	Airstream HWX with external air valve, recirculation valve, after-heater and cooler

T	A1	A2	A3	A4	A5	A6	A7	A8	A9	B	C	D	E	F
1500	1400	1650	1900	1700	1950	2200	2200	2450	2700	1200	1200	100	565	265
3000	1900	2150	2400	2200	2450	2700	2700	2950	3200	1200	1300	100	865	465
4500	1900	2150	2400	2200	2450	2700	2700	2950	3200	1500	1500	100	1155	465
6000	2100	2350	2600	2400	2650	2900	2900	3150	3400	1600	1600	100	1155	565
9500	2600	2850	3100	2900	3150	3400	3400	3650	3900	1800	1900	180	1455	565
12000	2700	2950	3200	3000	3250	3500	3500	3750	4000	2400	2000	180	2030	565
15000	2300	2550	2800	2600	2850	3100	3100	3350	3600	2400	2400	180	2030	865
20000	2600	2850	3100	2900	3150	3400	3400	3650	3900	2500	2500	180	2030	865
27500	3100	3350	3600	3400	3650	3900	3900	4150	4400	2900	2900	180	2030	865

* Optional change of airflow

Technical information

AIRSTREAM CFX		600	1400	2000	3200	4000	5400	6400	8600	10000	12500	15200	20000
Maximum air volume	m^3/h	600	1400	2000	3200	3700	5400	6400	8600	9200	12100	14250	19400
Maximum external pressure	Pa	250	425	150	1140	915	595	375	395	720	470	450	570
Efficiency	%	90	90	90	90	90	90	90	90	90	90	90	90
Maximum current consumption per unit	A	3,6	4,7	4,7	7,9	7,9	7,9	7,7	11,4	16,7	15,6	22,5	33,2
Weight of unit for L = A1	kg	435	520	530	690	745	980	1105	1550	1505	1810	2120	2690
Weight of unit for L = A2	kg	470	565	570	745	805	1030	1180	1645	1600	1930	2245	2855
Weight of unit for L = A3	kg	510	620	620	815	870	1125	1270	1770	1725	2085	2400	3075
Weight of unit for L = A4	kg	450	540	545	715	775	995	1145	1600	1555	1870	2195	2775
Weight of unit for L = A5	kg	485	585	590	765	835	1065	1220	1700	1650	1990	2320	2940
Weight of unit for L = A6	kg	585	640	645	830	915	1145	1310	1825	1775	2145	2470	3160
Supply voltage (50Hz)	V	1~230	1~230	1~230	3~400+N	3~400+N	3~400+N	3~400+N	3~400+N	3~400+N	3~400+N	3~400+N	3~400+N

AIRSTREAM HWX		1500	3000	4500	6000	9500	12000	15000	20000	27500
Maximum air volume	m^3/h	1500	3000	4500	6000	9500	12000	15000	20000	27000
Maximum external pressure	Pa	500	1250	975	580	875	500	230	845	265
Temperature efficiency	%	82,4	83,7	81,8	81	82,3	80,2	83,1	81	78,4
Humidity efficiency	%	88,8	90,9	87,7	86,4	88,6	85,3	90	86,3	81,9
Maximum current consumption per unit	A	5,0	8,5	8,5	17,2	17,5	17	16,9	34,4	29,1
Weight of unit for L = A1	kg	525	590	755	860	1115	1475	1785	1845	2245
Weight of unit for L = A2	kg	570	640	815	925	1195	1585	1895	1980	2385
Weight of unit for L = A3	kg	630	705	900	1015	1310	1745	2075	2165	2625
Weight of unit for L = A4	kg	550	625	795	900	1170	1540	1865	1935	2335
Weight of unit for L = A5	kg	600	670	855	965	1250	1655	1985	2070	2475
Weight of unit for L = A6	kg	655	735	935	1065	1365	1810	2160	2250	2715
Weight of unit for L = A7	kg	595	665	850	960	1240	1635	1965	2035	2445
Weight of unit for L = A8	kg	640	715	950	1030	1315	1750	2080	2315	2595
Weight of unit for L = A9	kg	695	785	990	1120	1430	1905	2250	2345	2825
Supply voltage (50Hz)	V	1~230	3~400+N	3~400+N	3~400+N	3~400+N	3~400+N	3~400+N	3~400+N	3~400+N

Accessories – additional sections

The Airstream can be equipped with the following options:
Integrated valves for external air, waste air, recirculated air.
Integrated pre- and after-heater (electric or hot water), change-over system, integrated cooler (cold water or DX).

Assembly/location suggestions

Indoor version

Outdoor version

Mark Airstream

Mark Airstream is constructed with 45 mm prefab insulated panels. The mechanical strengths of the casing have been tested according to NEN-EN 1886.

- Deflection: Class D1
- Air leakage: Class L1
- Thermal transmission: Class T2
- Thermal bridging: Class TB2

The fans in the air handling units are equipped with high-efficiency intelligent centrifugal fans with EC-technology, the advantages of which are:

- The highest efficiency in case of speed control
- Up to 50% energy saving in case of partial load
- Almost completely linearly adjustable
- Long lifetime
- Low noise level
- Integrated electronic thermal protection

Controls

Mark AIRSTREAM is provided with CPI / OJ-controls. This control system manages the entire unit. Frost protection for the counterflow heat exchanger, control of the bypass but also the control of the fans are included. This control system is extremely easy to adjust using the remote control or laptop / computer. For operation with laptop / computer, no additional software is needed. A network connection through Internet Explorer is all you need to get access. The menu structure is clear and intuitive, with different levels of access and authority.

It is possible to control the air amount on the basis of CO_2, air quality, loss of pressure or humidity. Each unit is internally fused and completely wired from the components to the isolator switch. Optional is the control of a 3-way valve for cooler, heater or battery change-over with the release of a pump. Obviously much more is possible, we will be pleased to advise you.

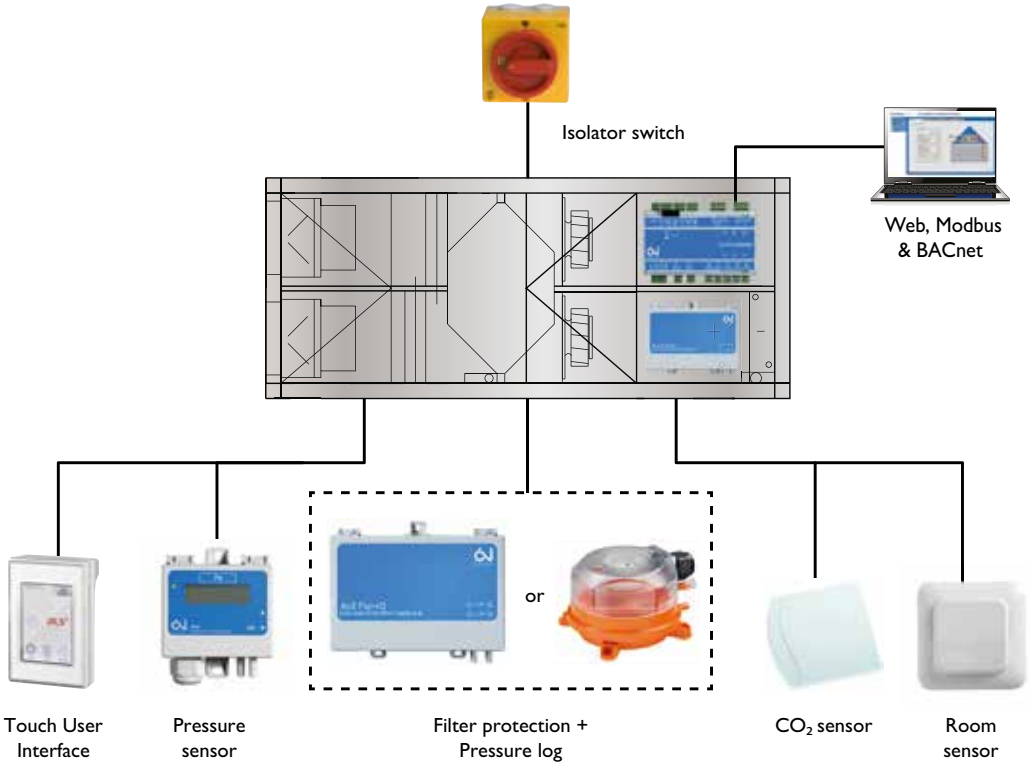

Plug & play heat recovery unit

Delivery from stock!

Are you familiar with our COMPACT? This economical and compact version of our Plug & Play AIRSTREAM heat recovery unit is equipped with a counterflow heat exchanger with bypass and a fully integrated control.

Where our AIRSTREAM is a custom-made and project-built device that excels in its versatility, the COMPACT is only equipped with the necessary options. This makes this unit an economical alternative for ventilation of offices, schools, workshops and changing rooms.

Features:
- Compact and standard construction
- Counter flow plate heat exchanger
- Bypass for night ventilation and cooling
- EC fans
- Plug & play
- Fully integrated control, connectable via internet to BMS, BACnet or Modbus
- Air volumes of 600, 1400, 2000 or 3200 m^3/h
- Efficiency > 90%
- Indoor and outdoor installation

Dimensions

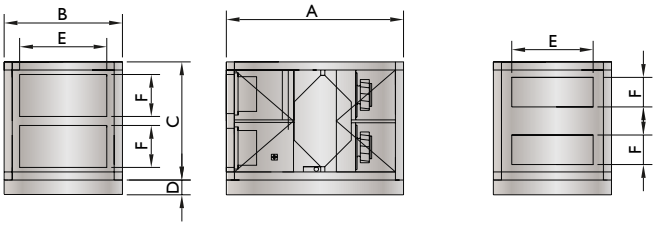

T	A	B	C	D	E	F
600	1203	800	955	100	565	265
1400	1403	1000	955	100	565	265
2000	1503	950	955	100	565	265
3200	1703	1200	1305	100	565	465

Technical information

COMPACT		600	1400	2000	3200
Max. air volume	m^3/h	600	1400	2000	3200
Max. external pressure	Pa	250	425	150	1140
Efficiëncy	%	90	90	90	90
Maximum current consumption per unit	A	3,6	4,7	4,7	7,9
Unit weight	kg	175	218	215	335
Supply voltage (50Hz)	V	1~230	1~230	1~230	3~400+N

Controls

Mark COMPACT is provided with CPI / OJ-controls. This control system manages the entire unit. Frost protection for the counterflow heat exchanger, control of the bypass but also the control of the fans are included. This control system is extremely easy to adjust using the remote control or laptop / computer. For operation with laptop / computer, no additional software is needed. A network connection through Internet Explorer is all you need to get access. The menu structure is clear and intuitive, with different levels of access and authority. Each unit is internally fused and completely wired from the components to the isolator switch. Obviously much more is possible, we will be pleased to advise you.

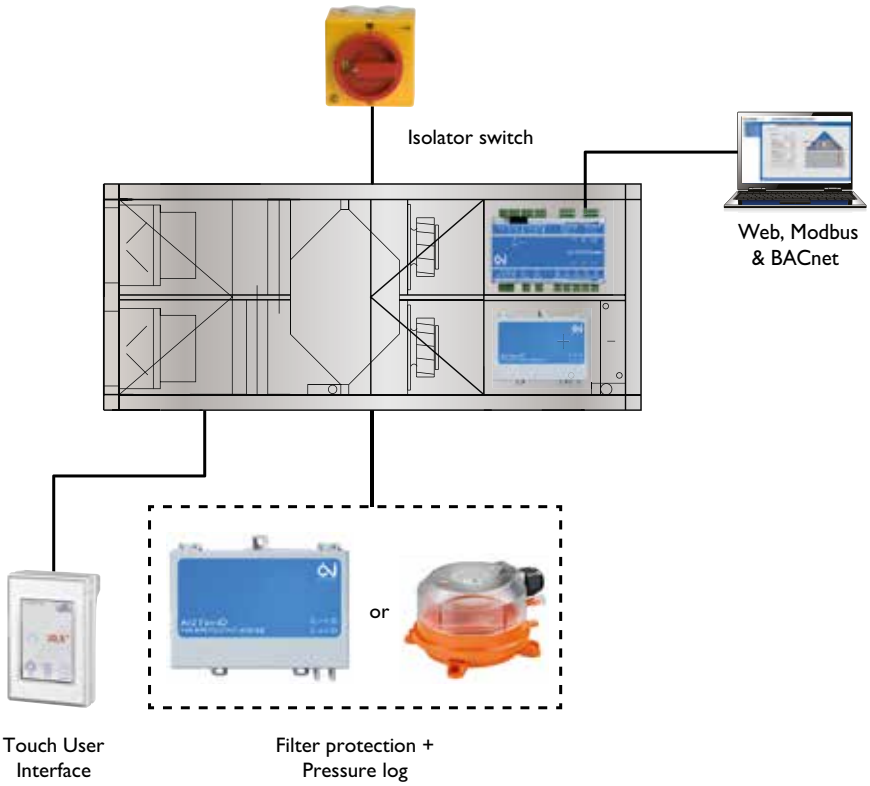

Prices Mark COMPACT heat recovery unit

PRODUCT - COMPACT - INDOOR

Code nr.	Description	Price
5995530	Compact 600 - Indoor	€ 7238
5995531	Compact 1400 - Indoor	€ 8569
5995532	Compact 2000 - Indoor	€ 9219
5995533	Compact 3200 - Indoor	€ 12159

PRODUCT - COMPACT - OUTDOOR

Code nr.	Description	Price
5995550	Compact 600 - Outdoor	€ 7928
5995551	Compact 1400 - Outdoor	€ 9272
5995552	Compact 2000 - Outdoor	€ 9922
5995553	Compact 3200 - Outdoor	€ 13014

ACCESSOIRES

Code nr.	Description	Price
5960100	Duct reducer from square to round for Compact 600, from 565x265mm to D=200mm	€ 167
5960101	Duct reducer from square to round for Compact 1400, from 565x265mm to D=315mm	€ 175
5960102	Duct reducer from square to round for Compact 2000, from 565x265mm to D=400mm	€ 184
5960103	Duct reducer from square to round for Compact 3200, from 565x465mm to D=500mm	€ 193
5960120	Vibration reducing duct connection for Compact 600, 565x265mm	€ 155
5960123	Vibration reducing duct connection for Compact 3200, 565x465mm	€ 177
0631374	OJ user interface with touchscreen	€ 335
5995791	Ball siphon over/under pressure set complete	€ 75
0414322	Playground tile 45mm, 505x505mm	€ 28
3004595	Vibration mats, set 15 stuks, 60x100mm	€ 25

The COMPACT is standard delivered with:
- M5 and F7 panel filters D = 100 mm
- Filter pressure monitoring
- Plug & Play OJ scheme
- Bypass
- Control side = right (looking in the direction of the airflow)

In addition, the outdoor installation also comes with:
- Aluminum roof
- Rain cover
- Relief hood
- Heating element for ball siphon

ERV

HEAT RECOVERY UNIT

Ceiling heat recovery unit with an efficiency up to 86%

Delivery from stock!

The Mark ERV is the ideal solution for energy efficient ventilation and a comfortable indoor climate. The appliance is equipped with a high efficiency counter flow heat exchanger with an heat recovery efficiency of 75-86%. This means that 75-86% of the energy expelled is supplied to the fresh intake air. This high efficiency means that in many cases no after-heating is required.

Possible applications for the ERV include offices, showrooms, apartment complexes and schools.

Characteristics
- High efficiency for optimal air comfort
- No condensation drain required
- Exchange of heat and moisture
- Energy-saving BLDC motor with 10 speeds
- Innovative high efficiency counter flow exchanger
- Low weight
- Indoor installation
- Automatic bypass, intelligently controlled by outside temperature
- Plug & play control, optional CO_2 and humidity control function, remote control and Modbus/BMS* control available
- ErP 2018 ready!

* for type 2000 only available at extra cost. Inquire about the possibilities.

Optional:
- Electric re-heaters
- Disinfection-unit to sterilize the outdoor polluted air

The Mark ERV is intended as a decentralized heat recovery unit. For central heat recovery, please refer to the Mark AIRSTREAM.

A Mark disinfection unit (MDU) can be used in combination with a Mark ERV. This unit is equipped with a UVC germicidal lamp with a wavelength of 254 nm and a medical photocatalytic sterilization filter to kill bacteria and viruses in a short time. This makes the MDU an excellent weapon in the fight for cleaner air.

Dimensions

Type	L	L1	W	W1	W2	H	H1	C	G	N
ERV500	962	890	904	960	500	270	111	107	19	ø 194
ERV1000	1322	1250	1134	1190	678	388	170	85	19	ø 242
ERV2000	1322	1250	1134	1190	678	785	170	150	19	280*650

ERV 500

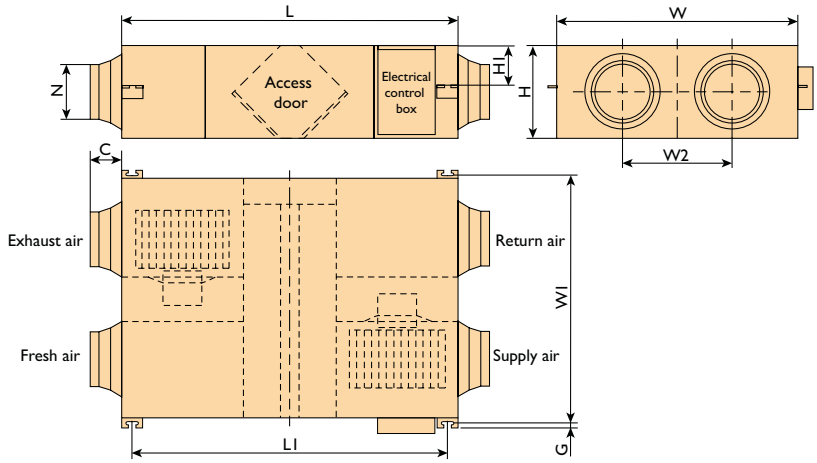

ERV 1000

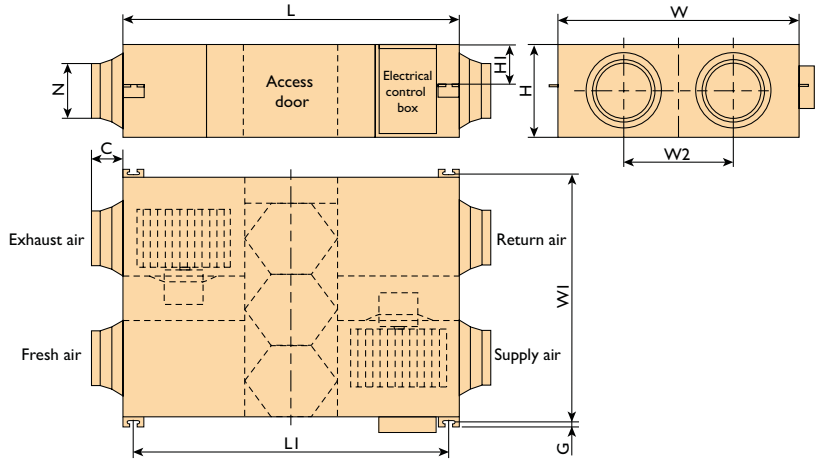

ERV 2000

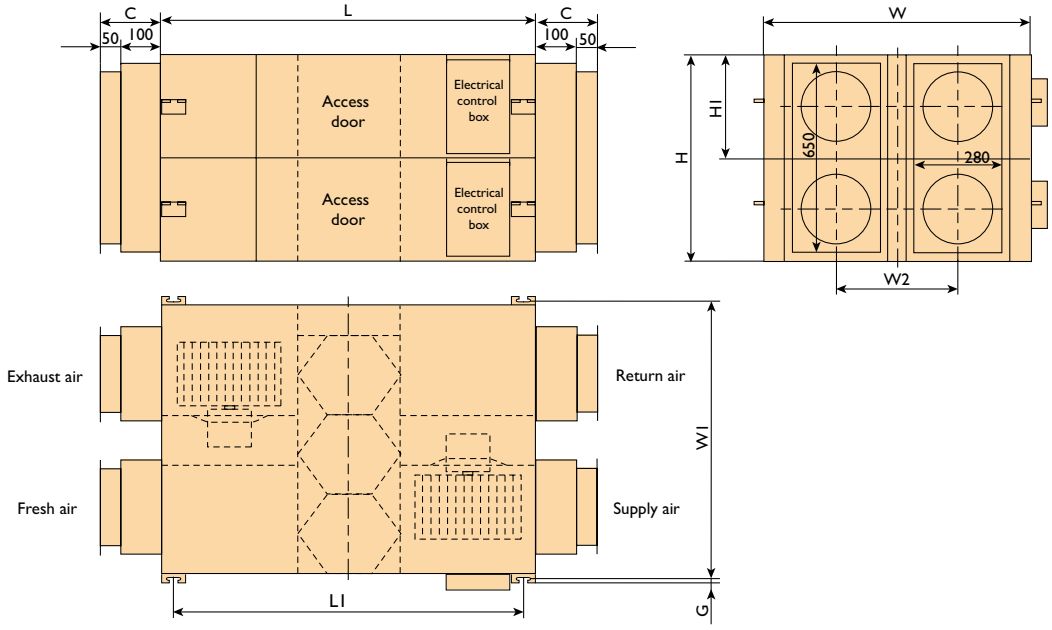

Technical information

Type		500	1000	2000
Air amount	m3/h	441	1208	1680
External pressure	Pa	60	110	110
Cooling efficiency	%	62-74	65-74	65-74
Heating efficiency	%	67-75	71-78	71-78
Temperature efficiency	%	75-86	75-85	75-85
Noise level (1m)	dB(A)	39	43	51.5
Supply voltage	V	220	220	220
Power	W	88	243	486
Weight	kg	43	83	189

Noise level (dB):

Type	63Hz	125Hz	250Hz	500Hz	1kHz	2kHz	4kHz	8kHz	Overall dB(A)
ERV500	34	40	35	35	36	28	22	17	39
ERV1000	38	44	39	41	40	31	31	19	43
ERV2000	45	52	46	48	48	48	37	23	51

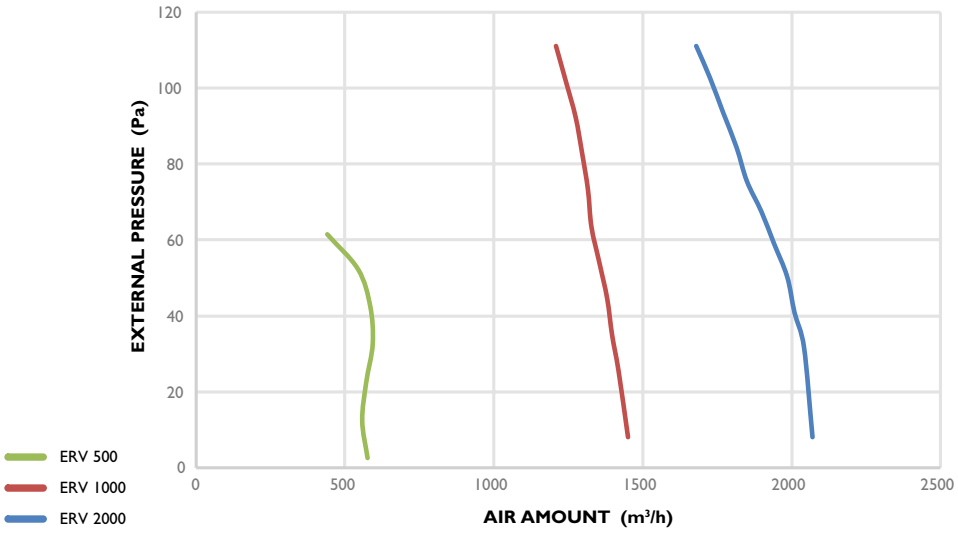

Prices Mark ERV ceiling heat recovery unit

PRODUCT - ERV CEILING HEAT RECOVERY UNIT*

Code nr.	Description	Price
5997401	ERV 500 ceiling heat recovery unit	€ 2468
5997403	ERV 1000 ceiling heat recovery unit	€ 3555
5997405	ERV 2000 ceiling heat recovery unit	€ 7589

ACCESSOIRES - CONTROL

Code nr.	Description	Price
5997450	Touch control user interface*	€ 257
5997451	CO2 sensor	€ 356
5997452	Humidity sensor	€ 141

ACCESSORIES - DISINFECTION-UNIT

Code nr.	Description	Price
5997402	Fresh air disinfection-unit MDU 500**	€ 791
5997404	Fresh air disinfection-unit MDU 1000***	€ 922

ACCESSOIRES

Code nr.	Description	Price
0620320	Filter for ERV 500	€ 13
0620321	Filter for ERV 1000 / 2000	€ 21
5997460	Electric duct heater 1.0 kW for ERV 500	€ 551
5997461	Electric duct heater 2.0 kW for ERV 1000	€ 619
5997462	Electric duct heater 3.0 kW for ERV 2000	€ 722

REMARK

* all ERV heat recovery units are standardly delivered with a Touch control user interface including data cable (5 meter).
** Compatible with ERV 500
*** Compatible with ERV 1000

ERV MOBILE

MOBILE VENTILATION UNIT

Simple solution for temporary or permanent effective ventilation

To quickly and easily provide rooms with effective ventilation, Mark has developed the ERV MOBILE. This mobile ventilation unit has the interior of a Mark ERV 1000 and a housing painted in RAL 9010.

This mobile heat recovery unit is the ideal solution for energy efficient ventilation and a comfortable indoor climate.

The ERV MOBILE fits through all common doors and is equipped with wheels for easy movement and is therefore very suitable for schools, nurseries, offices, churches and other public spaces.

Features
- High efficiency for optimal air comfort
- No condensation drain required
- Removable wheels
- Equipped with wired Touch control
- Delivered ready to plug
- Exchange of heat and moisture
- Energy-saving BLDC motor with 10 speeds
- Innovative high efficiency counter flow exchanger
- Low weight
- Indoor installation
- Automatic bypass, intelligently controlled by outside temperature
- Plug & play control, optional CO_2 and humidity control function, remote control and Modbus/BMS control available
- ErP 2018 ready!

For central heat recovery, please refer to the Mark AIRSTREAM.

Dimensions

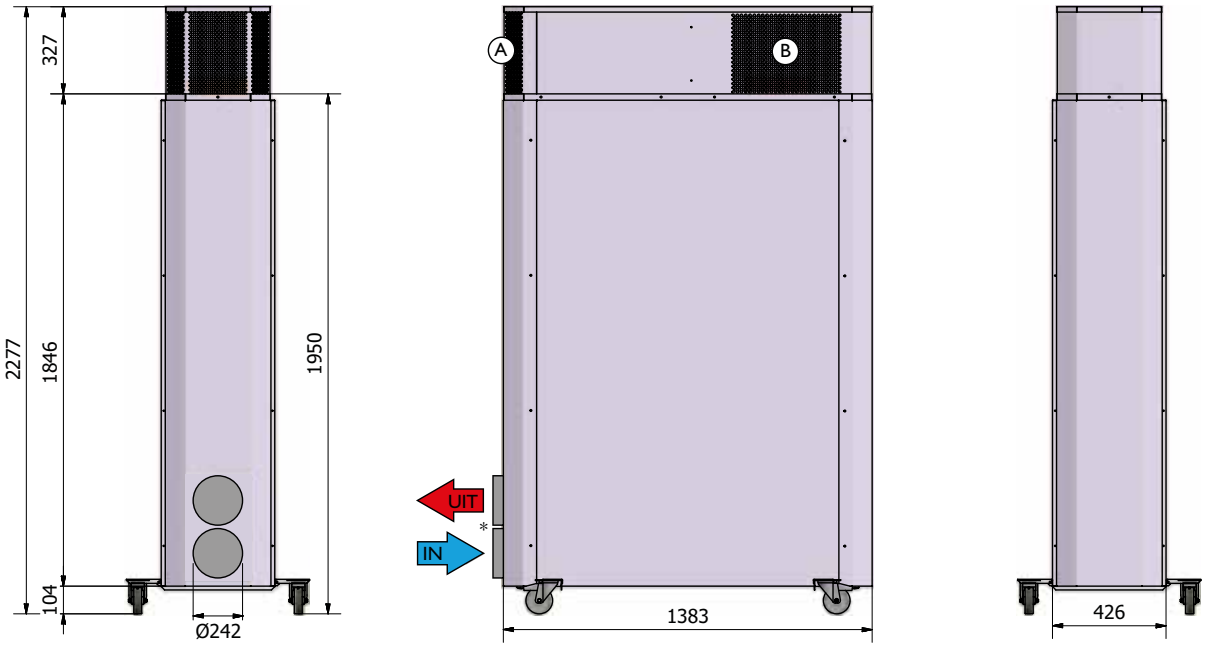

A = Recirculation air supply B = Air discharge

* The unit can also be supplied with the connections on the right side.

Technical information

ERV MOBILE		
Air amount	m3/h	1208
External pressure	Pa	110
Cooling efficiency	%	65-74
Heating efficiency	%	71-78
Temperature efficiency	%	75-85
Supply voltage	V	220
Power	W	243
Weight	kg	200

Noise level (dB):

63Hz	125Hz	250Hz	500Hz	1kHz	2kHz	4kHz	8kHz	Overall dB(A)
38	44	39	41	40	31	31	19	43

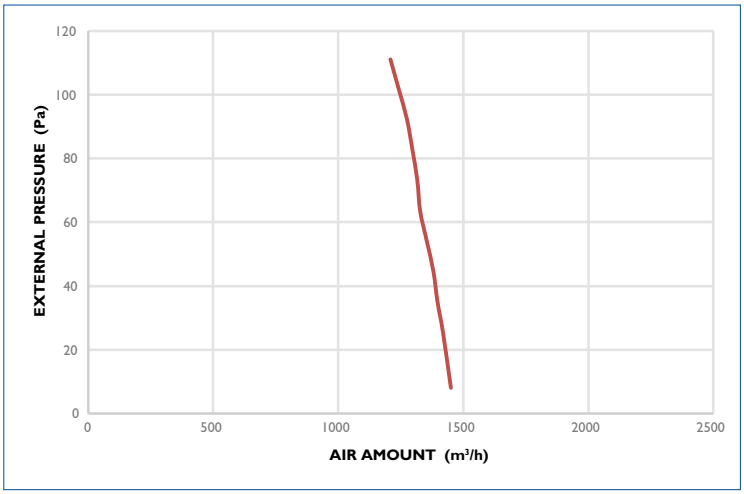

Prices Mark ERV MOBILE ventilation unit

PRODUCT - ERV MOBILE VENTILATION UNIT

Code nr.	Description	Price
	ERV MOBILE ventilation-unit	€ 4500

ACCESSORIES - CONTROL

Code nr.	Description	Price
5997450	Touch control user interface*	€ 257
5997451	CO2 sensor	€ 356
5997452	Humidity sensor	€ 141

ACCESSORIES

Code nr.	Description	Price
0620321	Filter for ERV 1000	€ 21

REMARKS

* all ERV MOBILE ventilation units are standardly delivered with a Touch control user interface including data cable (5 meter).

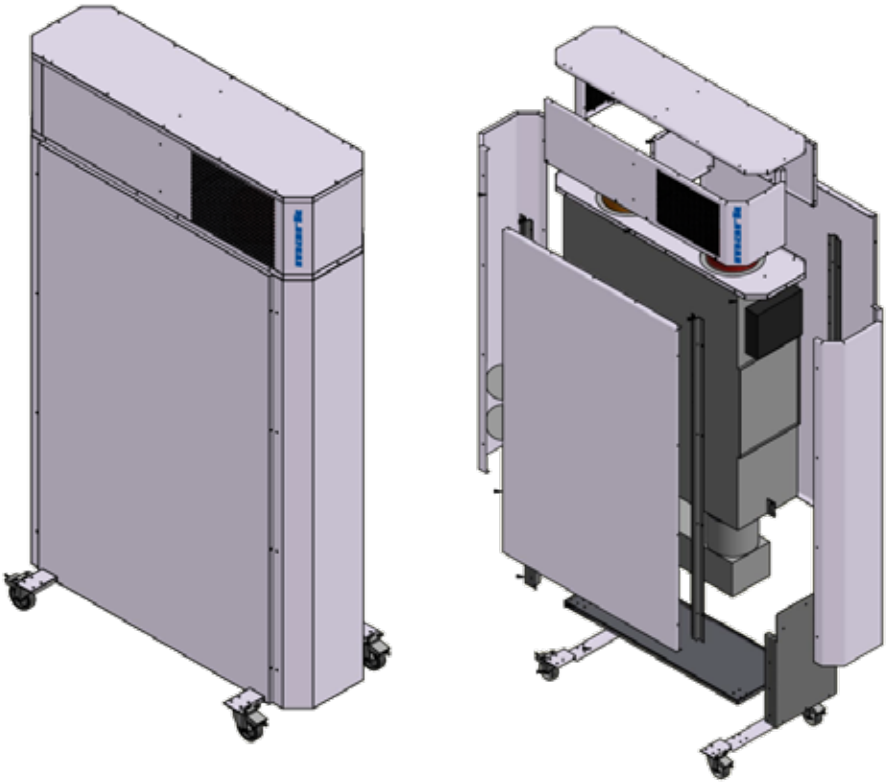

The ultimate in air handling units: directly and indirectly fired

Mark has developed a range of air handling units with several options for a wide variety of applications. From a simple air intake unit to a fully automatically-controlled air handling unit suitable for both indoor or outdoor use.
There is a wide selection of heating systems, such as hot water batteries, gas or oil-fired modules, gas-fired make-up air systems or high performance gas-fired heating systems.
Heat recovery and cooling are of course also possible.

The air handling units can be for internal and external use.
Mark air handling units are made from seawater-resistant aluminium panels with double-walled insulation as standard.
This means lower weight and a longer lifespan. The Mark air handling unit is a highly developed, premium quality product that can be adjusted to the customer's requirements.

Features
- Air displacements up to 150,000 m^3/h
- Very economical to buy and use
- Integration of high-efficiency heating modules is possible
- Modular construction
- Easy to maintain
- Long life
- Flexible and variable
- Proven design
- Low weight

Dimensions

Type of air handling unit	Air displacement max.	Dimensions (Width x Height)
AHU 15 – 15	10 000 m^3/h	975 x 975
AHU 15 – 20	14 150 m^3/h	975 x 1280
AHU 20 – 20	19 150 m^3/h	1280 x 1280
AHU 25 – 20	23 350 m^3/h	1530 x 1280
AHU 30 – 20	29 150 m^3/h	1890 x 1280
AHU 35 – 25	40 000 m^3/h	2195 x 1530
AHU 35 – 35	60 000 m^3/h	2195 x 2195
AHU 40 – 35	69 500 m^3/h	2508 x 2195
AHU 50 – 50	150 000 m^3/h	3120 x 3120
Projects on request	> 150 000 m^3/h	

Construction

- The air handling unit is of modular construction.
- The frame construction consists of profiled closed aluminium tube profiles.
- The individual cabinet modules can be installed in different ways, either in line, next to each other or on top of each other.
- The tube profiles are attached to each other using plastic angled profides to create a stable frame construction.

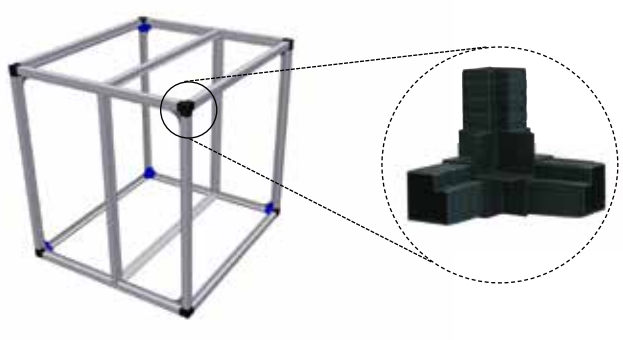

Modular construction

- The individual parts of the air handling unit are quick and easy to install due to a well thought out system.
- In almost every case, the modules are supplied pre-assembled.
- The individual modules are fixed to each other so that they are airtight.
- The double-walled aluminium panels are mounted in the frame in an airtight manner.
- The centering section in the corner of the module ensures correct installation to the next module.

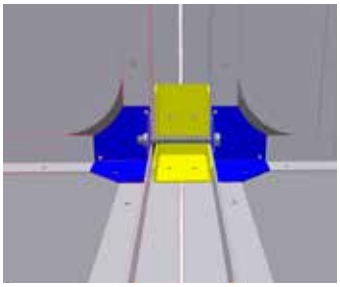

Technical detail

The access doors are fitted with adjustable, maintenance-free hinges (adjustable both in height and at the sides). The hinges, or panel clips if required, are mounted on the outside of the air handling unit. This prevents dirt from building up on the inside of the unit.

The access doors of the air handling unit are fitted with lockable spring locks. The airtight closure of the doors against the housing is guaranteed by a special rubber profile.

Sound and thermal insulation

Noise reduction is an important point for consideration in the design of an air handling unit. For this reason, we have opted to use a double-walled seawater-resistant aluminium panel with 25 or 40 mm mineral wool insulation. This also results in excellent thermal insulation.

A lot of attention is paid to the smooth finishing on the inside of the unit, which makes it easy to clean. See table for sound insulation values.

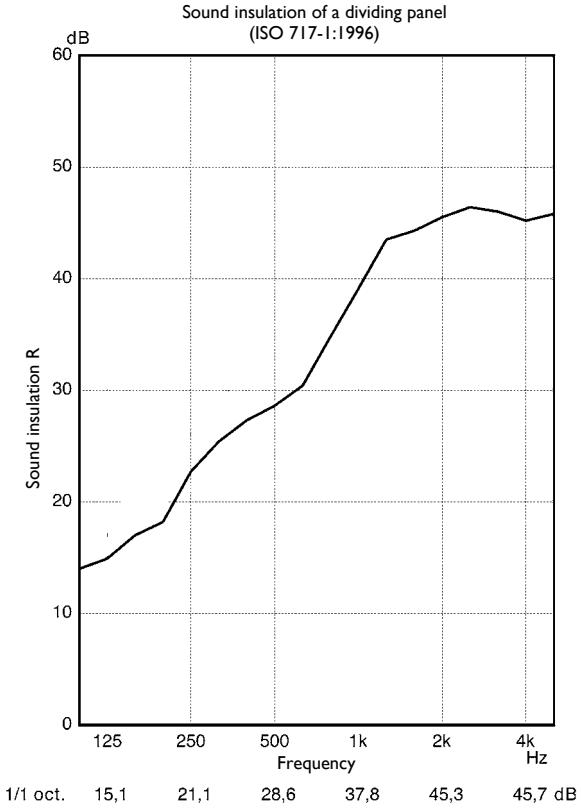

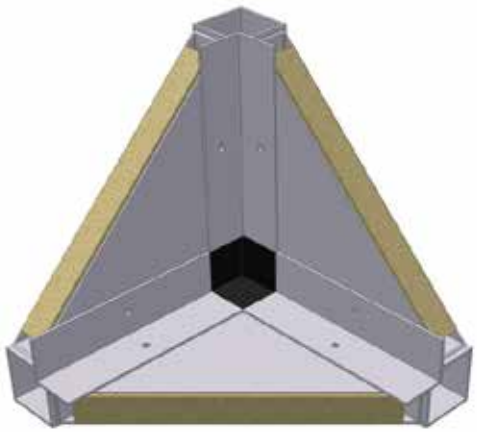

Optimal fan power

- The heart of the air handling unit is the fan.
- Mark selects the most suitable fan for the application requested.
- Depending on the application, a fan with forward or backward curved blades or a free-running fan can be used.
- The fan and the motor are placed on a frame. The frame is set up on shock absorbers in the housing.
- Delta P air flow monitoring is possible.

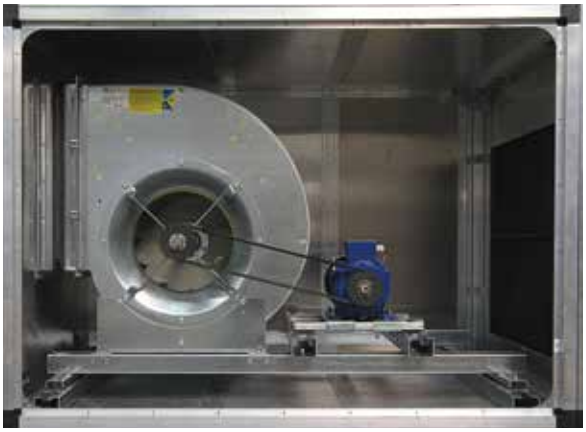

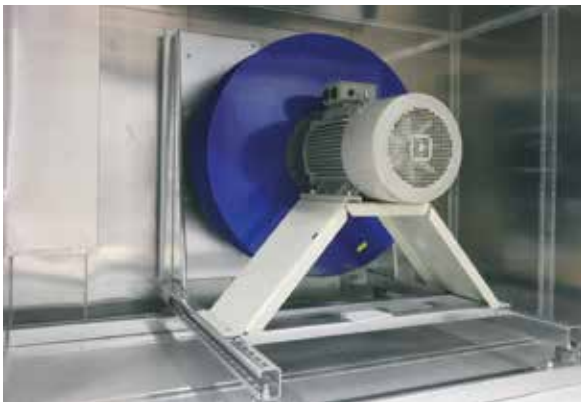

Filter section

To guarantee the right air quality, Mark offers a wide selection of filters.
All necessary care is taken in the sealing of the filter frames and filters.
Filters should be changed from the inside on the dirty side.
The filter options are:
– Panel filter
– Bag filter short
– Bag filter long
– High temperature filter
Special filters are available on request.
Delta P filter monitoring is possible.

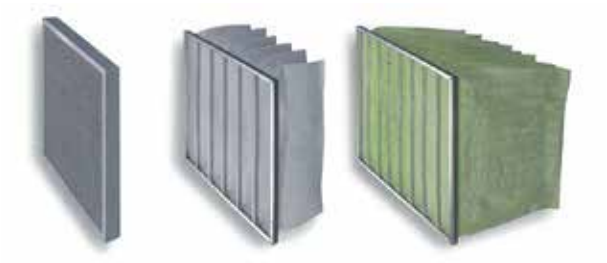

Heating systems

Mark air handling units can be equipped with various heat generators.

A Hot water battery
B Gas-fired condensing modulating high-efficiency air heater (> 106% efficiency)
C Direct gas- or oil-fired air heater.
D Direct gas-fired make-up air burner, only applicable if all intake air is expelled in a controlled manner.

Benefits:
Gas- and oil-fired air heaters
– No heat intermediary
– No heat loss during stoppages
– Large selection of heating capacities
– High-efficiency
– Good temperature control
– The air handling unit can be supplied as plug & play.

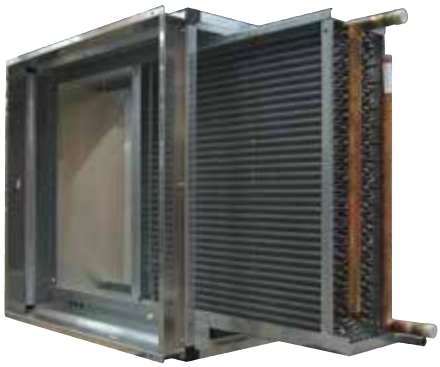

Hot water batteries

Hot water batteries are designed as standard in copper-aluminium. The heat exchanger connections can be fitted internally or externally.

Optional:
– Hot-dip galvanised
– Anti-corrosion coating
– Steam, thermal oil
– Frost protection thermostat

Gas-fired condensing modulating air heater

– Modulation range 4:1/7:1
– Efficiency >106%
– Closed design.
– Electronic ignition of the main burner.
– Control: modulating.
– Module suitable for installation in an air handling unit.

Type		15	25	35	40	60	80	100	135	150	200	300	400	540	600	800
Nominal load (upper value)	kW	16,1	27,2	38,8	44,4	66,7	88,9	110,6	149,9	166,7	216,7	331,8	433,4	599,6	650,1	866,8
Maximal power	kW	13,6	23,0	33,4	38,4	56,2	75,6	93,3	128,9	141,0	185,7	279,9	371,4	515,6	557,1	742,8
Minimal load (upper value)	kW	4,6	6,8	9,6	9,6	13,9	24,5	10,8	21,1	36,6	41,6	32,4	83,2	84,4	124,8	166,4
Minimal power	kW	4,3	6,6	9,2	9,2	13,5	23,8	10,6	20,6	35,3	40,6	31,8	81,2	82,4	121,8	162,4
Efficiency at 100% load	%	94,1	93,9	95,7	94,8	94,2	94,3	94,2	95,1	94,8	93,6	94,8	93,6	95,1	94,8	93,6
Efficiency at min. load	%	104,4	106,1	107,3	107,3	107,4	106,2	106,3	107,9	107,0	107,3	107,0	107,3	107,9	107,0	107,3
Burner turndown ratio	+/-	3:1	4:1	4:1	5:1	5:1	7:1	6:1	7:1	4:1	5:1	4:1	5:1	7:1	4:1	5:1
Air volume, min.	m^3/h	1250	2000	3760	3760	5640	7520	9400	13500	14200	17500	**	**	**	**	**
Air volume, max.*	m^3/h	4100	4100	7200	7200	8640	13680	16200	20880	20880	24500	**	**	**	**	**

* Larger air volumes using a bypass.
** On request

Direct gas-fired air heater

Burner
– Gas

Combustion chamber
– Stainless steel AISI 321
– Chrome steel (AISI 409)
  for the sizes 335/400

Heat exchanger
– Stainless steel AISI 304

Type		115	160	210	270	335	400
Nominal load (lower value)	kW	124,8	170,6	223,9	289,7	364,1	420,8
Nominal power	kW	115	155	200	270	347	400
Air volume minimum @ 100% input	m^3/h	8400	12000	13650	17550	21800	26000
Air volume minimum @ 50% input	m^3/h	5540	7900	9000	11600	14500	17300
Air volume maximum*	m^3/h	9611	13372	17551	22566	27998	33431

* Larger air volumes using a bypass.

Direct gas-fired make-up air burner

Direct gas-fired air make-up air heaters are integrated into the air handling unit.
This type of air heater is suitable only if the heated air is extracted mechanically.

Adjustment:
modulating 20:1.

CO ≤ 5 ppm
NO ≤ 1 ppm
NO_2 ≤ 1 ppm

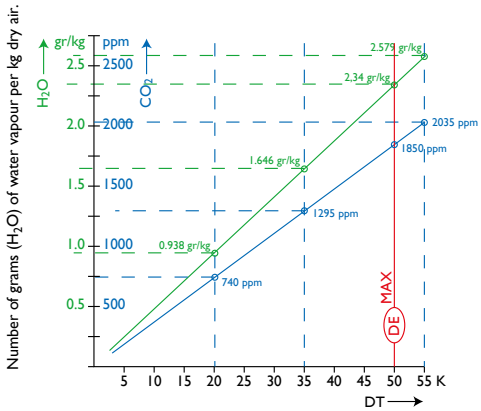

ΔT as a function of the added CO_2 in ppm.

1 m^3 air 15°C = 1.20 kg.

MONO Type		55	110	165	220	275	330	385	440	495	550	660	770
Nominal load (upper value)	kW	71	142	213	284	356	427	498	569	640	712	854	996
Nominal load (lower value)	kW	64	128	192	256	320	384	448	512	576	640	768	896
Minimum load (lower value)	kW	3,2	6,4	9,6	12,8	16,0	19,2	22,4	25,6	28,8	32,0	37,4	44,8
Air volume, min.	m^3/h	3500	7020	10450	14130	17510	20800	24350	27820	31210	39730	41680	48700
Air volume, max.	m^3/h	9600	19200	28800	38400	48000	57600	67200	69500	69500	69500	69500	69500

Heat recovery

Operating costs can be reduced and the environment protected by the use of heat recovery. Heat can be recovered using the following systems:

Cross-flow plate heat exchanger

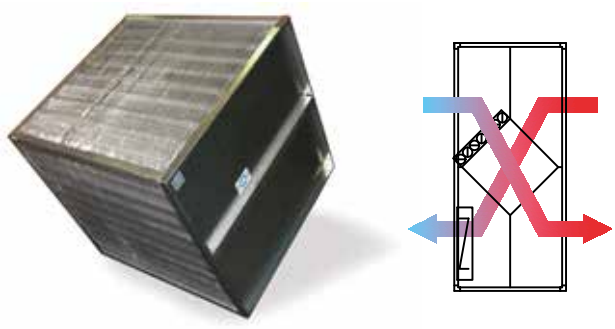

Benefits:
- Durable, no mechanical moving parts
- Reliable
- Simple installation
- Separate air flows
- Air flow via a by-pass is possible
- Very economical solution for heat recovery
- Efficiency > 50%

Twin-coil heat exchanger

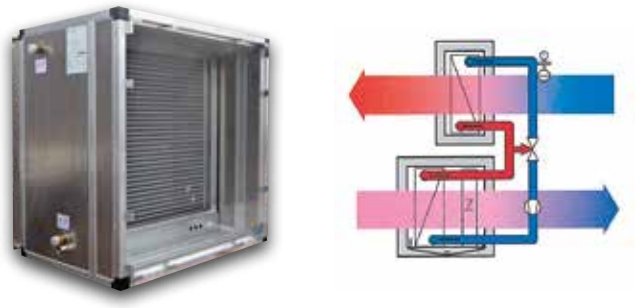

Benefits:
- Fresh air and return air can be separated spatially
- Short installation length
- Suitable for installation in existing units
- Can also be used at higher temperatures, large selection of heat exchangers, number of tube rows and materials used (Cu/Al or galvanized steel)
- Efficiency up to approx. 50%

Heat wheel

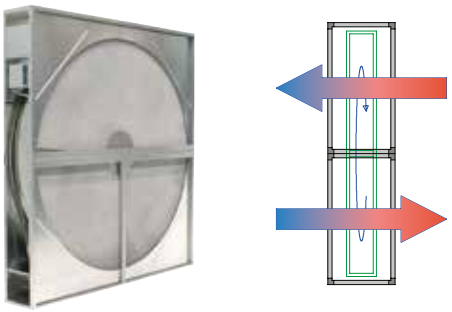

Benefits:
- Low pressure drop
- Compact construction
- High heat-exchanging power
- Option to re-use latent heat
- Option to re-use available humidity
- Efficiency between 60% and 90% can be selected

Mixing boxes

The air handling unit can be equipped with a mixing box. This box is placed between the air extraction section and the air inlet section.
The mixing box can be fitted with servomotor-controlled dampers.

Optional:
- Modulating - or open/closed control
- 24 V or 230 V.

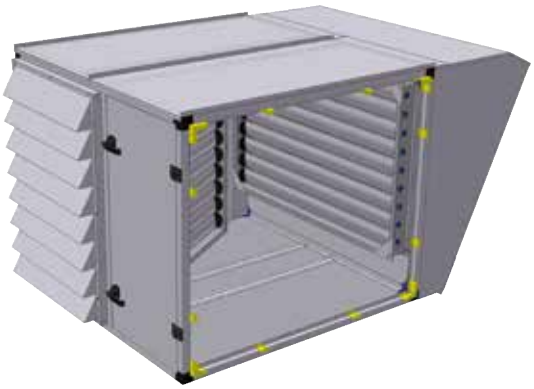

Cooling

Direct cooling (air cooling), "DX system"
Indirect cooling (water cooling), "Chiller"
Adiabatic cooling, "soft cool" (optional)

Indirect cooling

Water is cooled in the cooling unit. Cold water is pumped into a cold water battery in the air handling unit. This will cool the air flow.

Benefits:
- The cooling unit is installed separately from the air handling unit.
- Low investment costs
- Short installation length
- Low operating costs
- Good cooling efficiency
- Excellent air dehumidification
- Control sends the quantity of cold water through the air-cooled cold water battery
- The cooling unit ensures the water temperature is constant
- Highly adjustable
- Guaranteed cooling capacity.

Direct cooling

The air flow is cooled directly, the humidifier is situated directly in the air flow that needs to be cooled.

Benefits:
- Low investment costs
- Short installation length
- Low operating costs
- No water-related problems (risk of freezing, glycol concentrate, corrosion)
- Good cooling efficiency
- Excellent air dehumidification.

GC+

GAS-FIRED AIR HEATER

Custom-made environment friendly heating with standard Mark-equipment

In addition to the High Efficiency air heater, the Mark-range also includes a gas-fired, high performance air heater with a centrifugal fan. The GC+ is particularly suited for connection to duct systems, or systems where high pressure is required. This condensing equipment provides efficiency greater than 106% (lower value). Heat is generated via a modulating (5:1) premix burner which results in very low gas consumption.

The GC+ is operated using an Optitherm+ clock thermostat or an Interface+ module that allows a connection with the BMS (building management system) via Modbus or a 0-10V contact.
The Optitherm+ also makes it possible to control the GC+ units remotely with an app for mobile phone and tablet (available soon). Other operating options are also available.

An extensive range of additional sections has been developed for the GC+. This ensures the standard GC+ can be simply and affordably adapted to any project specification. The comprehensive capacity range (15-150 kW) also means the area of application for this type of equipment is virtually limitless. The GC+ can additionally be incorporated into an air handling unit.

The GC+ is designed to heat garages, warehouses, workshops, schools and sports halls among other applications, with or without a duct system.

Features of the Mark GC+
- Centrifugal fan with forward curved blades
- 3-phase electric motor 1400 min^{-1}
- V-belt transmission
- Shock absorbers
- Low noise level
- Variable air volume
- Variable delta T
- System air pressure up to 300 Pa
- Fan outlet position: front side
- Low maintenance
- Modulation range 5:1

Options
- Centrifugal fan with backward curved blades
- Insulated fan casing
- Outdoor version available

Dimensions

B = Gas connection
C = Combustion air inlet
D = Flue gas exhaust
E = Electrical connection
F = Centrifugal fan
G = Condensation connection ø40 mm

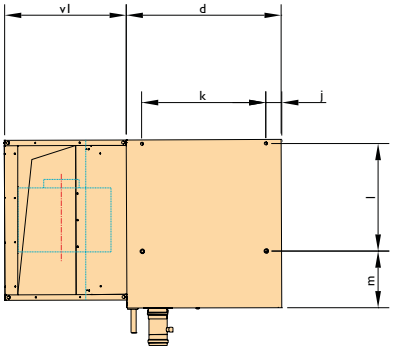

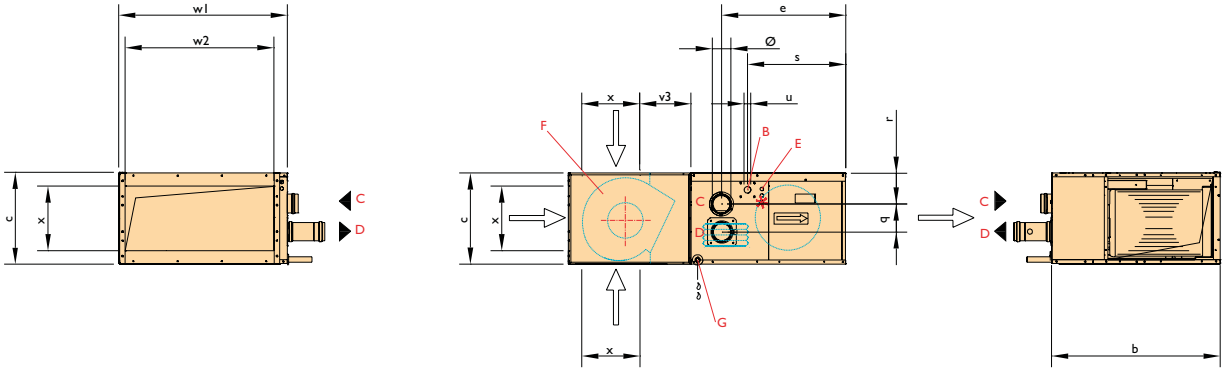

T	B	C	D	E	G	H	J	K	L	M	Ø	Q	R	S	U	V1	V3	W1	W2	X
15/25	760	410	700	560	375	669	70	560	485	255	80	120	139	444	1/2"(M)	550	182	723	670	360

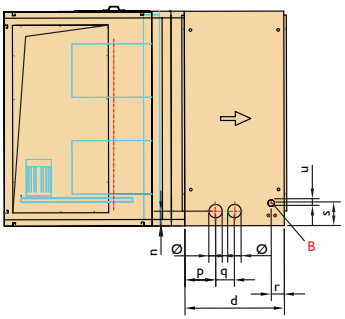

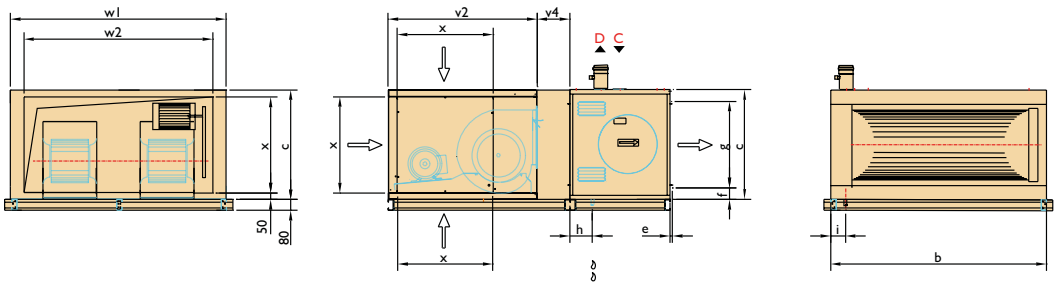

T	B	C	D	E	F	G	H	I	Ø	P	Q	R	S	U	V2	V3	V4	W1	W2	X
35	875	810	739	35	105	600	165	110	80	240	120	97	175	3/4" (M)	1100	100	244	875	675	710
40	875	810	739	35	105	600	165	110	80	240	120	97	175	3/4" (M)	1100	100	244	875	675	710
60	1120	810	739	35	105	600	165	110	100	230	140	97	175	3/4" (M)	1100	100	244	1120	920	710
80	1305	810	739	35	105	600	165	110	100	230	140	97	175	1" (M)	1100	100	244	1305	1105	710
100	1595	810	739	35	105	600	165	110	100	230	140	97	175	1" (M)	1100	100	244	1595	1395	710
135/150	1890	1000	1000	35	105	790	190	175	130	235	225	140	170	1" (F)	1100	-	304	1890	1750	800

Technical information

Type		15	25	35	40	60	80	100	135	150
Nominal load (upper value)	kW	16,1	27,2	38,8	44,4	66,7	88,9	110,6	149,9	166,7
Maximal power	kW	13,6	23,0	33,4	38,4	56,2	75,6	93,3	128,9	141,0
Minimal load (upper value)	kW	4,6	6,8	9,6	9,6	13,9	24,5	10,8	21,1	36,6
Minimal power	kW	4,3	6,6	9,2	9,2	13,5	23,8	10,6	20,6	35,3
Flue efficiency at maximum load (lower value)	%	94,1	93,9	95,1	95,1	93,6	94,0	93,8	95,5	94,0
Flue efficiency at minimum load (lower value)	%	106,7	107,0	106,9	106,9	107,3	107,1	107,4	107,5	107,3
Burner turndown ratio	+/-	3:1	4:1	4:1	5:1	5:1	7:1	6:1	7:1	4:1
Gas consumption G20 (15°C)	m^3/h	1,56-0,45	2,61-0,66	3,65-0,88	4,18-0,88	6,22-1,34	8,16-2,25	10,30-1,78	14,05-1,98	15,30-3,37
Gas consumption G25 (15°C)	m^3/h	1,75-0,49	2,95-0,74	4,10-1,02	4,73-1,02	7,03-1,47	9,30-1,40	11,57-1,85	15,98-2,25	17,05-3,75
Gas consumption G30 (15°C)	kg/h	1,19-0,33	2,02-0,51	2,92-0,72	3,46-0,72	5,05-1,11	6,70-0,96	8,19-1,48	11,1-1,85	12,35-2,72
Gas consumption G31 (15°C)	kg/h	1,13-0,32	1,91-0,48	2,68-0,64	3,17-0,64	4,72-1,04	6,22-0,89	7,76-1,34	10,51-2,23	11,69-2,57
Minimum air displacement (20°C)	m^3/h	1250	2000	3760	3760	5640	7520	9400	12500	14000
Delta T (ΔT)	K	32,7	34,5	26,6	30,3	30,3	30,3	31,3	30,8	30,5
Nominal air displacement (20°C)	m^3/h	1400	2300	5000	5000	6500	10000	12500	18500	18500
Delta T (ΔT)	K	29,2	30,0	20,0	22,8	26,3	22,8	23,5	20,8	23,1
Maximum air displacement (20°C)	m^3/h	4100	4100	7200	7200	8640	13680	16200	20880	20880
Delta T (ΔT)	K	10,0	16,8	13,9	15,8	19,8	16,7	18,1	18,4	20,5
Fan		9-7	9-7	12-12	12-12	12-12	twin 12-19	twin 12-12	twin 15-15	twin 15-15
Dimensions fan	max.	-	-	112	112	112	112	112	132	132

External pressure = 0-300 Pa, more on request
G25 = Natural gas, G20 = Natural gas, G31 = Propane, G30 = Butane

Accessories – flue gas exhaust

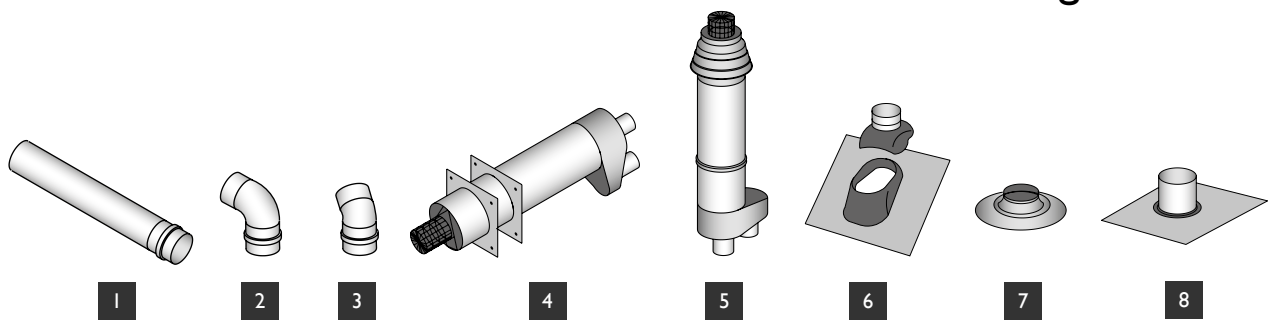

1 Extension set
2 90° elbow
3 45° elbow
4 Single flue set horizontal
5 Single flue set vertical
6 Roof flashing for pitched roof
7 Adhesive plate
8 Flexible roof flashing for cladded roof

Assembly/location suggestions

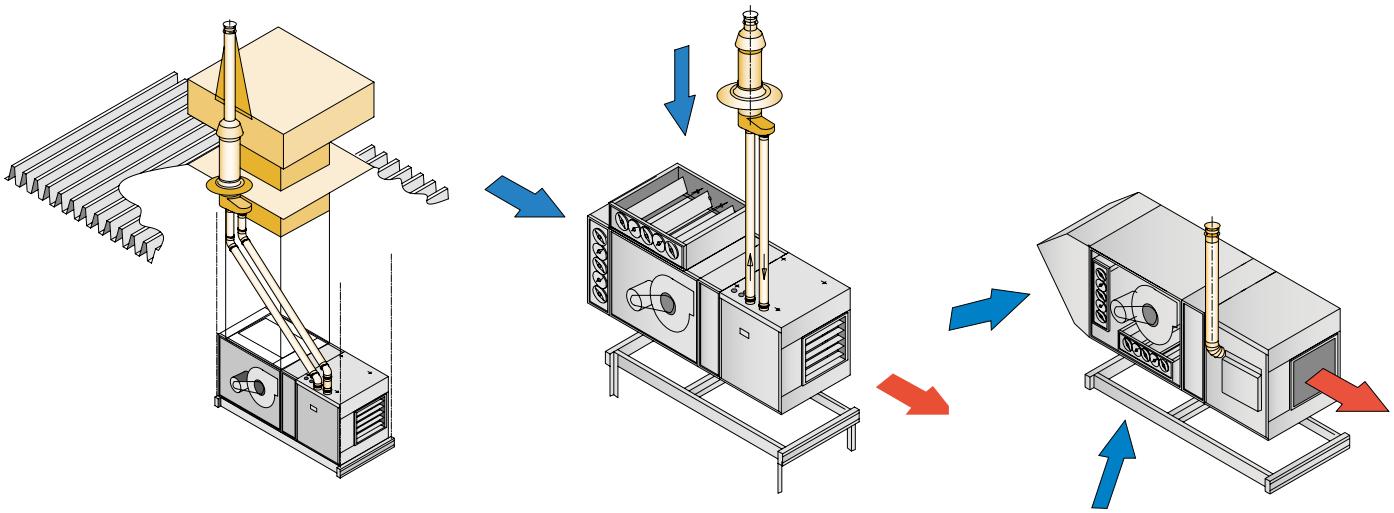

Accessories – additional sections

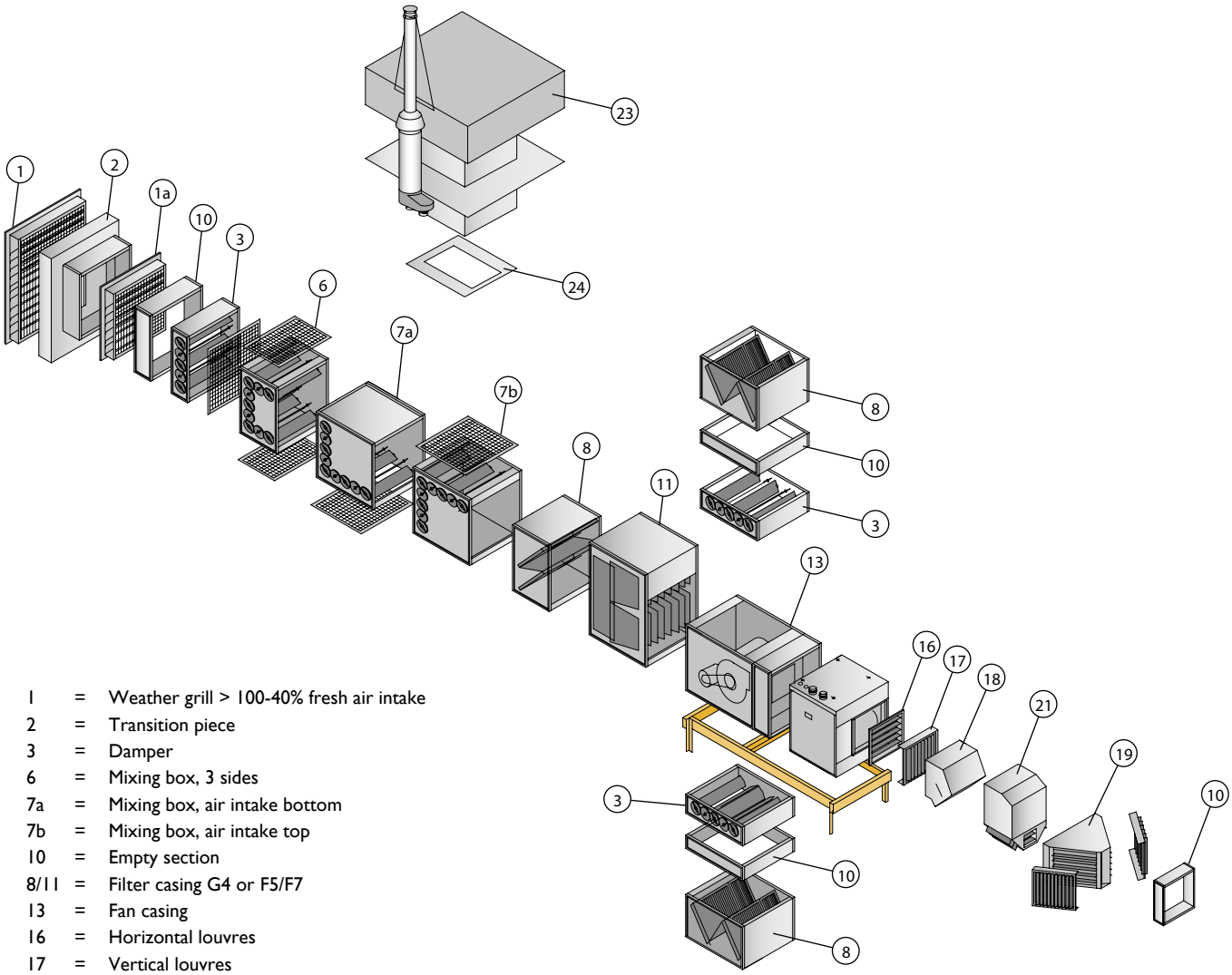

1	=	Weather grill > 100-40% fresh air intake
2	=	Transition piece
3	=	Damper
6	=	Mixing box, 3 sides
7a	=	Mixing box, air intake bottom
7b	=	Mixing box, air intake top
10	=	Empty section
8/11	=	Filter casing G4 or F5/F7
13	=	Fan casing
16	=	Horizontal louvres
17	=	Vertical louvres
18	=	Downflow hood 45°
19	=	Diffuser 2 x 45°
21	=	Downflow hood 90°
23	=	Hood
24	=	Transition piece

Controls

Installation with:
- Optitherm+
- Room temperature control

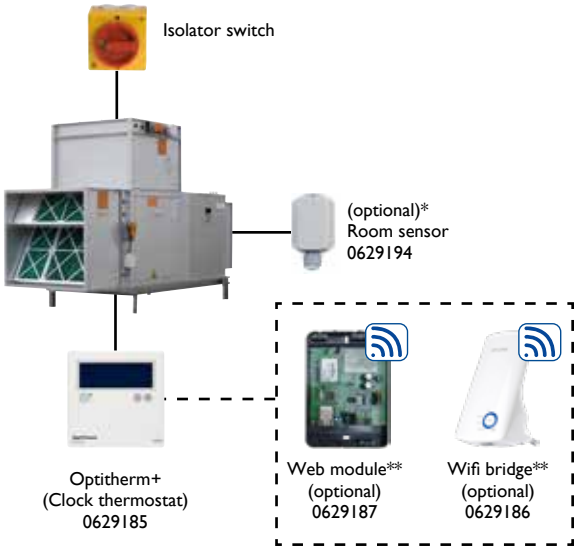

Installation with:
- Interface+
- Capacity control with external 0-10V signal or Modbus.

Installation with:
- Optitherm+ in combination with Interface+
- Room temperature control in combination with Modbus. Allows you to read the status and change the settings of the Optitherm+.

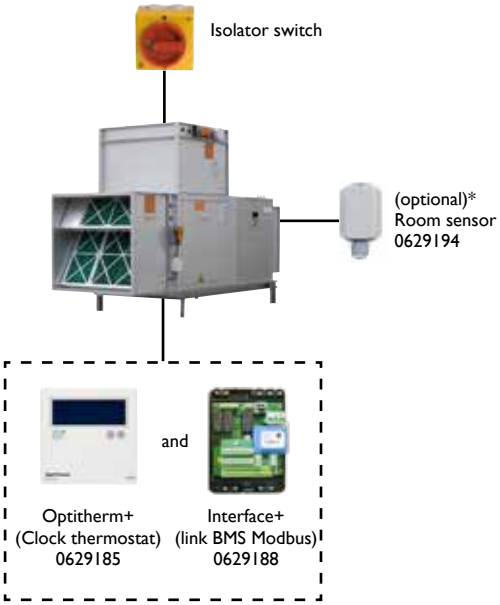

* Only in combination with Optitherm+

** A remote connection with the mobile phone app is only possible when using a Web module. A WiFi bridge can be added to create a wireless connection (available soon). NOTE: The use of a Web module, possibly in combination with a Wifi bridge, is not possible when using an Interface+.

Installation with:
- Optitherm+
- Room temperature control

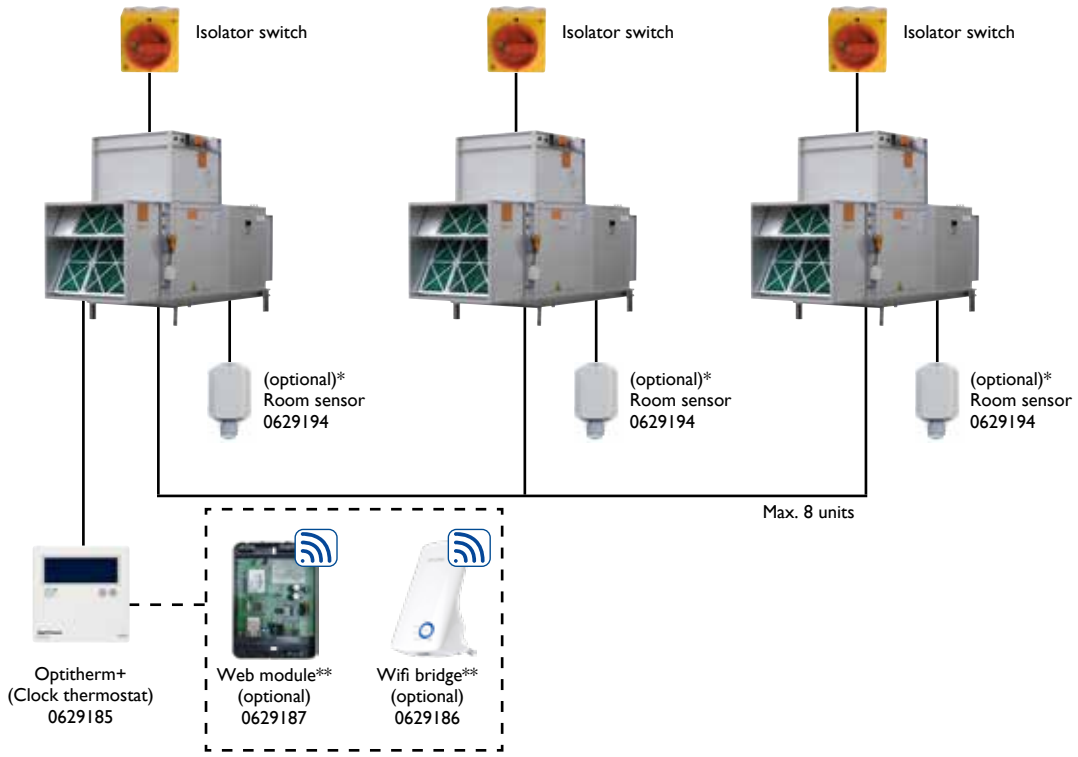

Installation with:
- Optitherm+ in combination with Interface+
- Room temperature control in combination with Modbus. Allows you to read the status and change the settings of the Optitherm+.

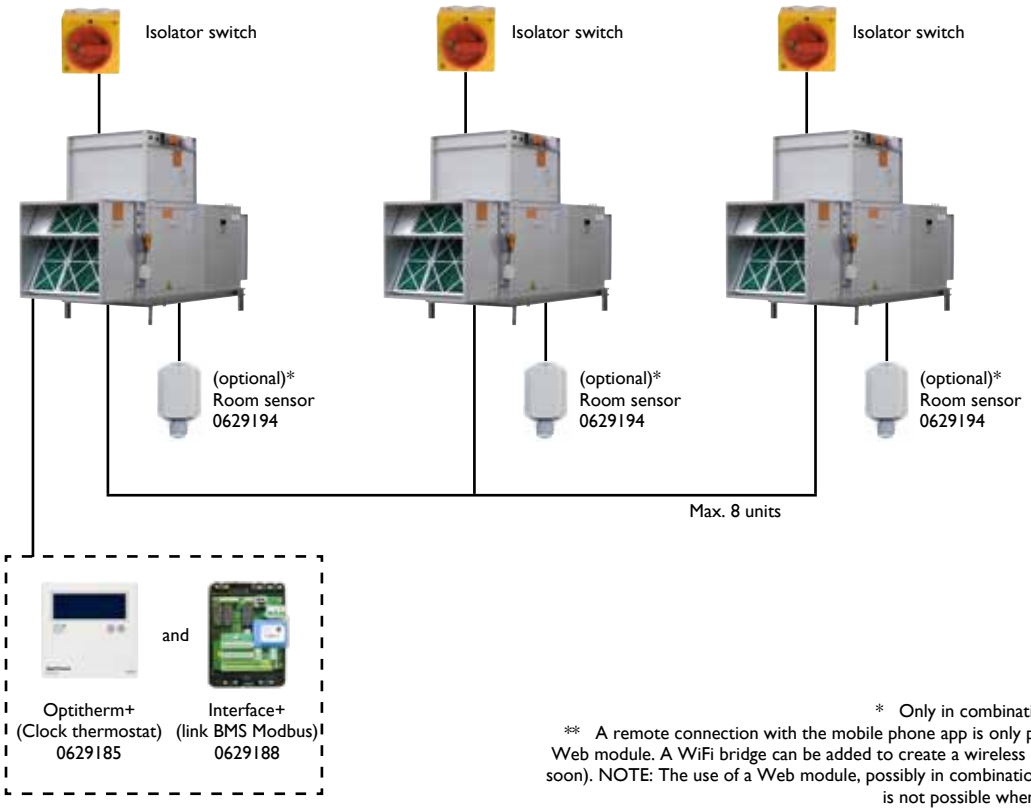

* Only in combination with Optitherm+

** A remote connection with the mobile phone app is only possible when using a Web module. A WiFi bridge can be added to create a wireless connection (available soon). NOTE: The use of a Web module, possibly in combination with a Wifi bridge, is not possible when using an Interface+.

CALFLO

MAKE-UP AIR UNIT

Maximum performance with large air quantities

The Mark CALFLO is a make up air heating system. This means that the burner (and the flame) is located directly in the air flow to deliver maximum performance. The flue gases are so clean that they may be blown into the building. The CALFLO is suitable for rooms requiring large degrees of ventilation. This appliance is equipped with a modulating stainless steel burner and a seawater-resistant aluminium housing.

Possible applications include sand blasting areas, welding areas, and the processing industry.

Features

- Stainless steel line or box burners AlMg3 seawater-resistant aluminium housing (single-skin or double-skin)
- Low weight
- Available for both inside and outside installation
- Large air displacement
- Wide turndown ratio through use of modulating burner
- Long lifespan
- Extensive configuration options
- Reliable
- HT filters (option)

Dimensions

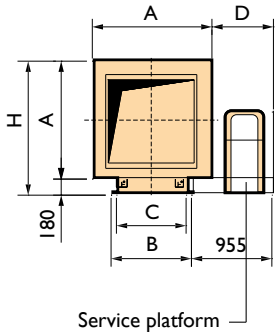

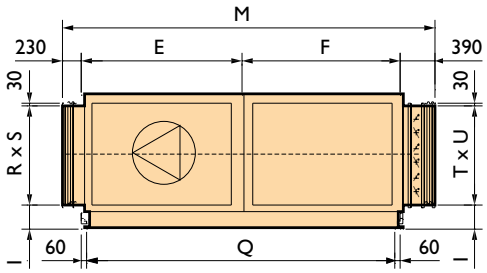

1

1-4: Indoor version
5&6: External installation

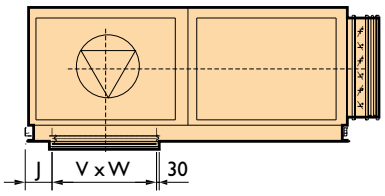

2

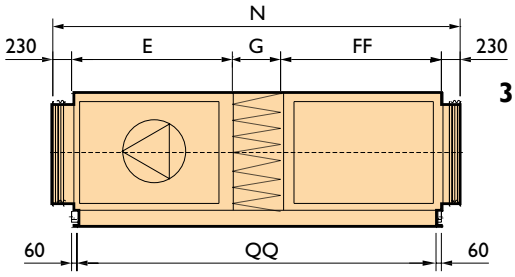

3

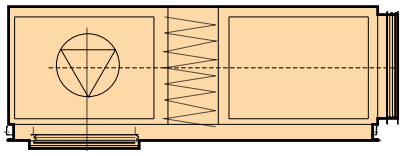

4

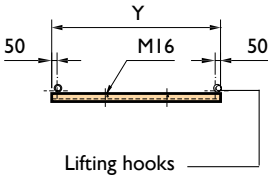

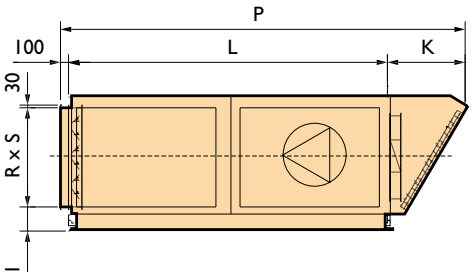

5

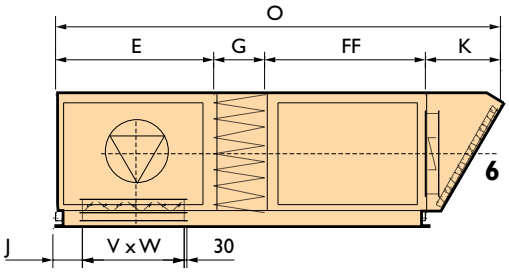

6

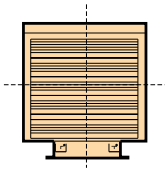

This table belongs to page 167.

Type	A	B	C	D	E	F	FF	G	H	I	J	K	L	M	N	O	P	Q	QQ	RxS	TxU	VxW	Y
55CK55	1090	870	750	845	1090	1090	1680	590	1270	295	160	745	2180	2800	3820	4105	3025	2040	3220	860x820	1025x1020	820x530	1400
55CK35	1090	870	750	845	1090	1090	1680	590	1270	295	160	745	2180	2800	3820	4105	3025	2040	3220	860x820	1025x1020	820x530	1400
110CK55	1090	870	750	845	1090	1090	1680	590	1270	295	160	745	2180	2800	3820	4105	3025	2040	3220	860x820	1025x1020	820x530	1400
110CK35	1090	870	750	845	1090	1090	1680	590	1270	295	160	745	2180	2800	3820	4105	3025	2040	3220	860x820	1025x1020	820x530	1400
165CK55	1404	960	840	733	1900	1900	1900	600	1584	287	340	915	3800	4420	4860	5315	4815	3680	4280	1190x1220	1190x1220	1220x695	2000
165CK35	1404	960	840	733	1900	1900	1900	600	1584	287	340	915	3800	4420	4860	5315	4815	3680	4280	1190x1220	1190x1220	1220x695	2000
220CK55	1404	960	840	733	1900	1900	1900	600	1584	287	340	915	3800	4420	4860	5315	4815	3680	4280	1190x1220	1190x1220	1220x695	2000
220CK35	1404	960	840	733	1900	1900	1900	600	1584	287	340	915	3800	4420	4860	5315	4815	3680	4280	1190x1220	1190x1220	1220x695	2000
275CK55	1404	960	840	733	1900	1900	1900	600	1584	287	340	915	3800	4420	4860	5315	4815	3680	4280	1190x1220	1190x1220	1220x695	2000
275CK35	1804	1370	1250	738	1900	1900	1900	600	1984	405	240	1165	3800	4420	4860	5565	5065	3680	4280	1355x1420	1685x1620	1420x1025	2400
330CK55	1804	1370	1250	738	1900	1900	1900	600	1984	405	240	1165	3800	4420	4860	5565	5065	3680	4280	1355x1420	1685x1620	1420x1025	2400
330CK35	1804	1370	1250	738	1900	1900	1900	600	1984	405	240	1165	3800	4420	4860	5565	5065	3680	4280	1355x1420	1685x1620	1420x1025	2400
385CK55	1804	1370	1250	738	1900	1900	1900	600	1984	405	240	1165	3800	4420	4860	5565	5065	3680	4280	1355x1420	1685x1620	1420x1025	2400
385CK35	1804	1370	1250	738	1900	1900	1900	600	1984	405	240	1165	3800	4420	4860	5565	5065	3680	4280	1355x1420	1685x1620	1420x1025	2400
440CK55	1804	1370	1250	738	1900	1900	1900	600	1984	405	240	1165	3800	4420	4860	5565	5065	3680	4280	1355x1420	1685x1620	1420x1025	2400
495CK55	1804	1370	1250	738	1900	1900	1900	600	1984	405	240	1165	3800	4420	4860	5565	5065	3680	4280	1355x1420	1685x1620	1420x1025	2400
440CK35	2204	1810	1690	758	2200	2200	2200	600	2384	357	190	1280	4400	5020	5460	6280	5780	4280	4880	1850x1820	2015x2020	1820x1355	2800
495CK35	2204	1810	1690	758	2200	2200	2200	600	2384	357	190	1280	4400	5020	5460	6280	5780	4280	4880	1850x1820	2015x2020	1820x1355	2800
550CK55	2204	1810	1690	758	2200	2200	2200	600	2384	357	190	1280	4400	5020	5460	6280	5780	4280	4880	1850x1820	2015x2020	1820x1355	2800
550CK35	2204	1810	1690	758	2200	2200	2200	600	2384	357	190	1280	4400	5020	5460	6280	5780	4280	4880	1850x1820	2015x2020	1820x1355	2800
660CK55	2204	1810	1690	758	2200	2200	2200	600	2384	357	190	1280	4400	5020	5460	6280	5780	4280	4880	1850x1820	2015x2020	1820x1355	2800
660CK35	2204	1810	1690	758	2200	2200	2200	600	2384	357	190	1280	4400	5020	5460	6280	5780	4280	4880	1850x1820	2015x2020	1820x1355	2800
770CK55	2204	1810	1690	758	2200	2200	2200	600	2384	357	190	1280	4400	5020	5460	6280	5780	4280	4880	1850x1820	2015x2020	1820x1355	2800
770CK35	2204	1810	1690	758	2200	2200	2200	600	2384	357	190	1280	4400	5020	5460	6280	5780	4280	4880	1850x1820	2015x2020	1820x1355	2800

Technical information

Type		55	110	165	220	275	330	385	440	495	550	660	770
Nominal load (upper value)	kW	71	142	213	284	356	427	498	569	640	712	854	996
Nominal load (lower value)	kW	64	128	192	256	320	384	448	512	576	640	768	896
Minimum load (lower value)	kW	3,2	6,4	9,6	12,8	16,0	19,2	22,4	25,6	28,8	32,0	38,4	44,8
Burner turndown ratio		20:1	20:1	20:1	20:1	20:1	20:1	20:1	20:1	20:1	20:1	20:1	20:1
Gas consumption G25 (15°C)	m^3/h	7,9	15,8	23,6	31,5	39,4	47,3	55,1	63,0	70,9	78,8	94,5	110,3
Gas consumption G20 (15°C)	m^3/h	6,8	13,5	20,3	27,1	33,9	40,6	47,4	54,2	60,9	67,7	81,3	94,8
Gas consumption G31 (15°C)	kg/h	5,0	9,9	14,9	19,9	24,8	29,8	34,8	39,7	44,7	49,7	59,6	69,5
Gas consumption G30 (15°C)	kg/h	5,1	10,1	15,2	20,2	25,3	30,3	35,4	40,4	45,5	50,5	60,6	70,7
Air displacement ΔT35K (15°C)	m^3/h	5430	10870	16300	21740	27170	32600	38040	43470	48900	54340	65200	76080
Fan type ΔT35K		355	450	560	560	710	710	710	900	900	900	900	1000
Air displacement ΔT55K (15°C)	m^3/h	3500	7020	10450	14130	17510	20800	24350	27820	31210	34730	41680	48700
Fan type ΔT55K		355	450	560	560	560	710	710	710	710	900	900	900

Assembly/location suggestions

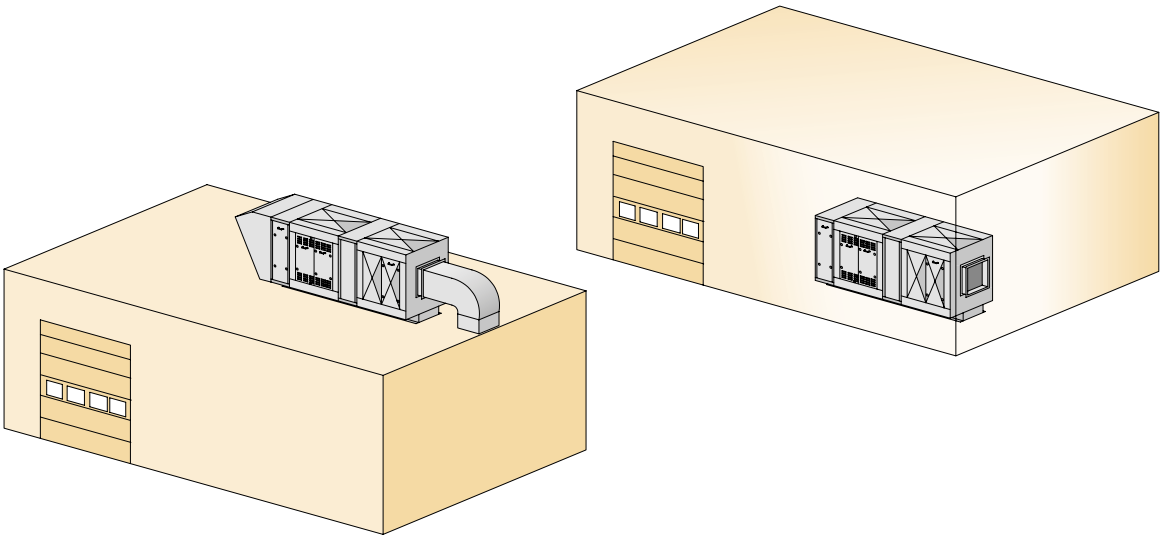

Controls

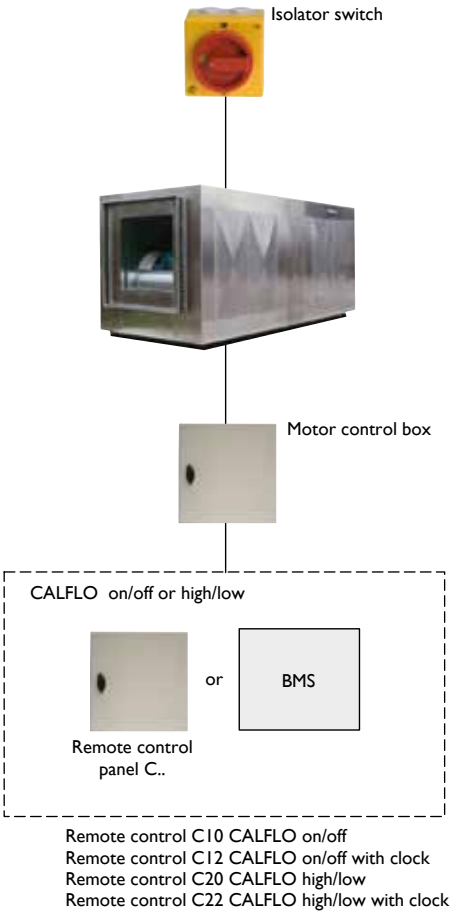

COLDSTREAM

ADIABATIC COOLING

Sustainable ventilation and adiabatic cooling

The Mark ColdStream adiabatic cooling is based on the evaporation of water. The required heat is taken from the outside air. The fresh outside air flows through the water-wetted cellulose filters. Due to the evaporation of the water, the air temperature is reduced in a natural and environmental-friendly manner.

The principle is based on the ventilated cooling with very low operational costs for a favorable price. The system is particularly suitable for cooling and ventilation of large industrial areas.

The technique is reliable, safe, easy and virtually maintenance free. Another big advantage is that there is no annual inspection required. The simple technique is cheap in terms of system maintenance. In addition, the system is legionella proof.

The Mark ColdStream is suitable for workshops, garages, weldinghalls, sports halls, bakeries and exhibition halls.

Features
- Electronic remote control with the following functions:
  - Temperature
  - Speed control
  - Relative humidity control
  - Daily and weekly programming
- Economical fan
- Electrical shut-off valve on the water connection
- Water distribution system with an electric pump
- High efficiency cellulose filter pack
- Automatic water change
- Automatic water drainage
- Automatic cleaning

Advantages
- High ventilation rate
- Ventilation and / or cooling in one system
- Low operating costs
- Favourable purchase price
- Cheap maintenance
- Environmentally friendly
- Increased productivity
- Durable

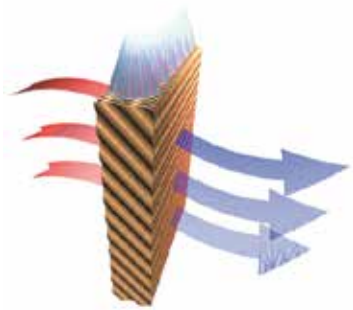

mark®

Dimensions

TYPE TA209

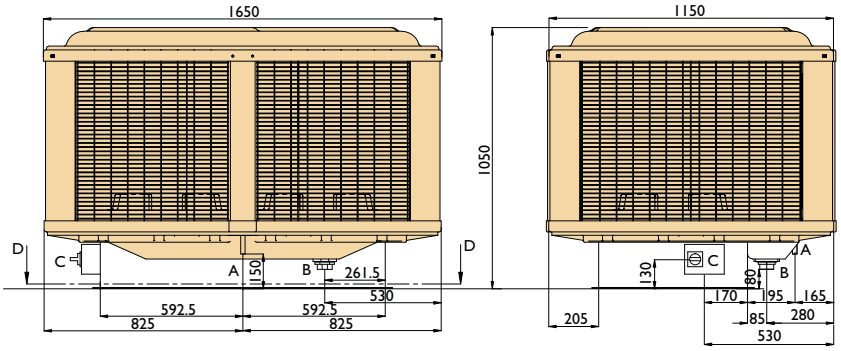

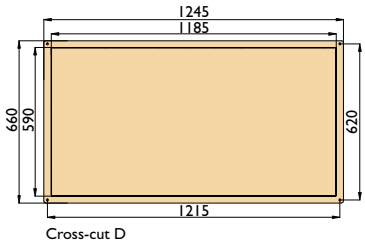

TYPE TC209

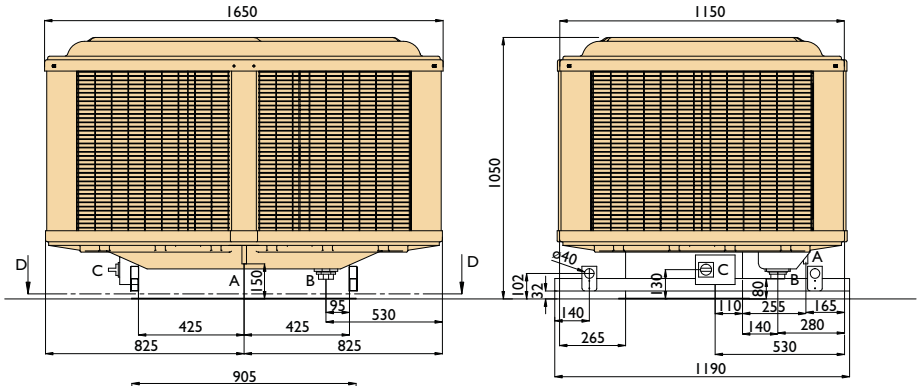

A = Water inlet
B = Water outlet
C = Electrical connections
D = Air duct connection

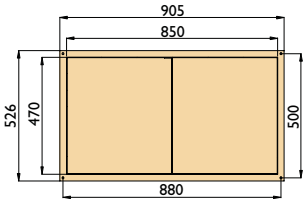

Technical information

Type		TA209	TC209*
Cooling capacity	kW	30	30
Airflow	m3/h	20.000	20.000
Nominal power	W	1.800	3.200
Voltage	V/Hz	230/50	400/50
Weight	kg	146	186

* Unit with centrifugal fan: available static pressure = 80 Pa
Specials on request.

Relative air humidity	30% T. outlet	40% T. outlet	50% T. outlet	60% T. outlet	70% T. outlet	80% T. outlet
Outside temperature 20 °C	13,5 °C	14,5 °C	15,5 °C	16,5 °C	17,5 °C	18,5 °C
Outside temperature 25 °C	16,0 °C	17,5 °C	19,0 °C	20,0 °C	21,5 °C	23,0 °C
Outside temperature 30 °C	19,0 °C	21,0 °C	23,0 °C	24,5 °C	26,0 °C	28,0 °C
Outside temperature 35 °C	22,5 °C	25,0 °C	27,5 °C	29,5 °C	31,0 °C	32,5 °C
Outside temperature 40 °C	22,5 °C	25,0 °C	27,5 °C	29,5 °C	31,0 °C	37,5 °C

MARK COLDSTREAM ENSURES OPTIMAL PRODUCTIVITY

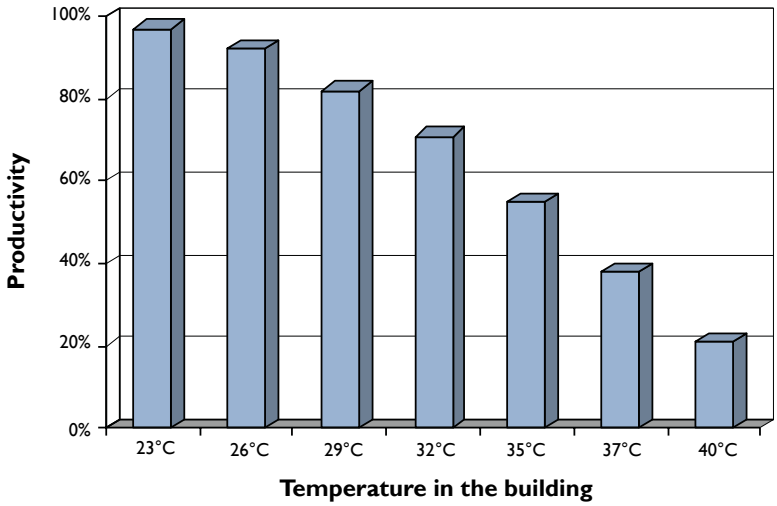

Assembly/location suggestions

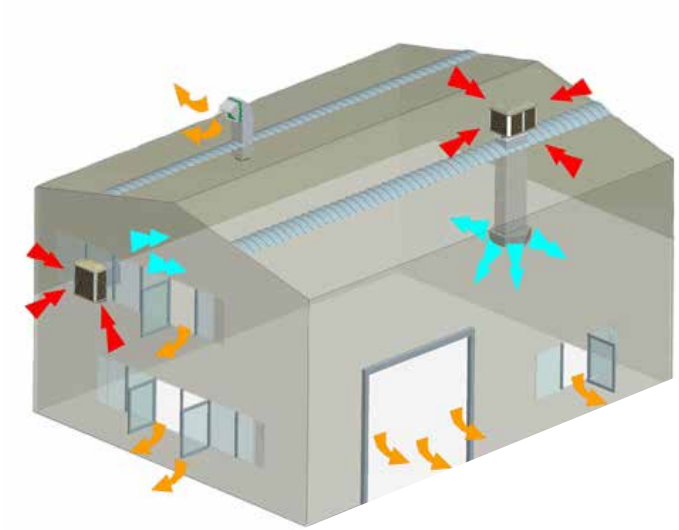

Accessories

Winter cover

6-sided hexagonal air blowing plenum with horizontal louvres

Controls

CABS-SYSTEM
With the CABS system 5 ColdStream units can be controlled with 1 Electronic Remote.
Mark ColdStream CABS-System is available on request.

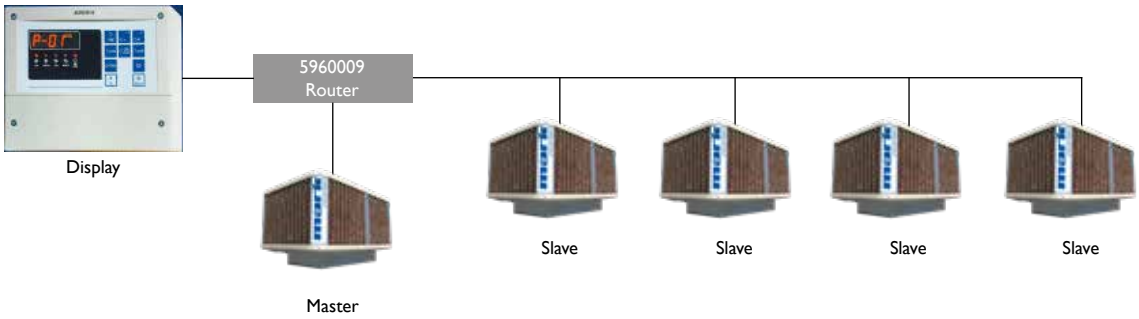

Prices Mark COLDSTREAM

PRODUCT - COLDSTREAM ADIABATIC COOLER

Code nr.	Description	Price
5960004	Mark ColdStream adiabatic cooler TA 209	€ 6528
5960006	Mark ColdStream adiabatic cooler TC 209 with centrifugal fan	€ 8664

ACCESSORIES - CONTROLS

Code nr.	Description	Price
5960010	EVO display electronic remote control	€ 485
5960009	Router for CABS-system	€ 407
0631163	Isolator switch, separate delivery, 230V (4 poles)	€ 64
0631167	Isolator switch, separate delivery, 400V (8 poles)	€ 81

ACCESSORIES - OTHER

Code nr.	Description	Price
5960011	Winter cover for ColdStream TA 209 and TC 209	€ 354
5960012	6-sided hexagonal air blowing plenum with horizontal louvres	€ 1379
5960013	Air duct TA 209 L=1000mm	€ 749
5960014	Air duct TA 209 L=2000mm	€ 932
5960015	Air duct TC 209 L=1000mm	€ 749
5960016	Air duct TC 209 L=2000mm (2x1000mm)	€ 932

MARK HEAT PUMPS

AIR-WATER

High-quality air-water heat pumps from Mark

In addition to our wide range of DX heat pumps, Mark Climate Technology now also has high-quality air-water heat pumps in its range. The air-water heat pumps are very easy to install and extremely suitable in combination with various systems for cooling and heating.

They can of course also be used in combination with the Mark Airstream heat recovery units and the Mark AHU air handling units. In addition, the heat pumps are easily adjustable, low maintenance and reliable.

We distinguish three types:

- i-MV5: Monoblock air-water heat pump for cooling and heating
  Capacities: 4-18 kW
- MWAI-A: cooling only
  Capacities: 40-85 kW & 106-349 kW
- MWAI-A/H: air-cooled heat pump for cooling and heating
  Capacities: 40-85 kW & 109-345 kW

Features:

- Frame made of solid galvanized sheet steel
- Scroll 3-phase compressor complete with integrated protection module
- Axial fans type AC, with which condensation control up to 0 °C is possible.
- Evaporator
- Front operation
- Microprocessor with logic program for overheating
- Refrigerant circuit manufactured according to UNI EN 13134 directive
- High and low pressure transducers, with values that can be shown on the display
- Water circuit with copper pipes
- Standard quipped with control and security equipment

Dimensions i-MV5 (4-18 kW)

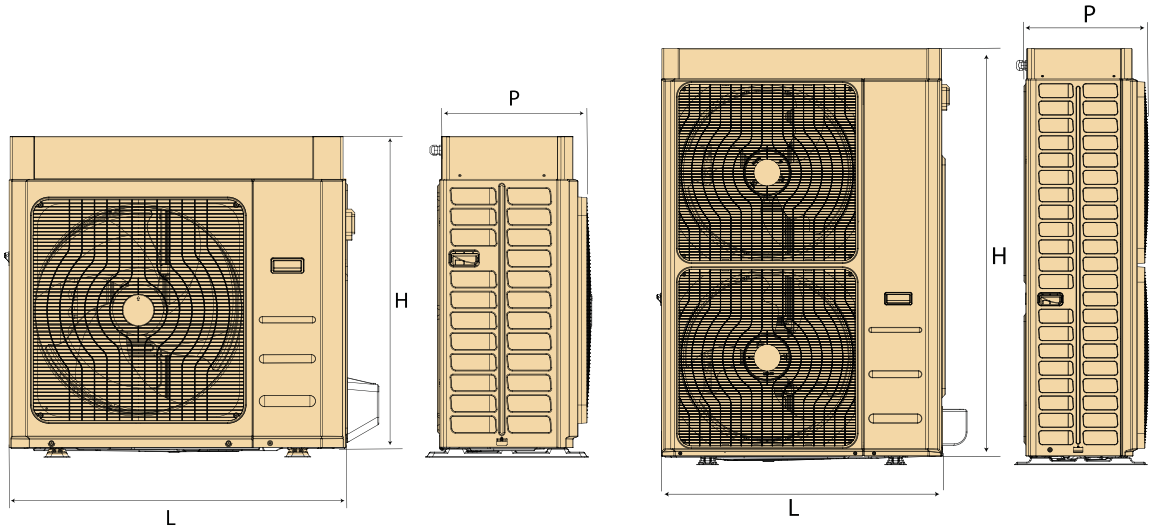

Type		04	06	08	10	10T	12	12T	14	14T	16	16T	18T
L	mm	924	924	924	1047	1047	1047	1047	1044	1044	1044	1044	1044
P	mm	377	377	377	456	456	456	456	455	455	455	455	455
H	mm	828	828	828	936	936	936	936	1409	1409	1409	1409	1409

Technical information i-MV5 (4-18 kW)

	Type		04	06	08	10	10T	12	12T	14	14T	16	16T	18T
cooling	Cooling capacity (1)	kW	4,23	5,02	6,08	7,53	7,53	8,51	8,51	11,48	11,48	13,8	13,8	15,04
cooling	*Power input* (1)	kW	1,29	1,6	1,99	2,39	2,39	2,79	2,79	3,53	3,53	4,38	4,38	4,88
cooling	EER (1)	W/W	3,28	3,14	3,05	3,15	3,15	3,05	3,05	3,25	3,25	3,15	3,15	3,08
cooling	Cooling capacity (2)	kW	5,51	6,18	7,72	9,5	9,5	11,6	11,6	14,0	14,0	15,8	15,8	17,1
cooling	*Power input* (2)	kW	1,10	1,28	1,76	2,15	2,15	2,79	2,79	2,59	2,59	3,15	3,15	3,59
cooling	EER (2)	W/W	5,02	4,82	4,38	4,41	4,41	4,16	4,16	5,40	5,40	5,02	5,02	4,76
cooling	SEER (5)	W/W	4,07	4,12	4,25	4,15	4,15	4,25	4,25	4,62	4,62	4,80	4,80	4,91
cooling	Water flow (1)	L/s	0,20	0,24	0,28	0,36	0,36	0,41	0,41	0,55	0,55	0,66	0,66	0,71
cooling	Pressure drop (1)	kPa	80,8	78,8	76,0	68,9	68,9	63,4	63,4	75,0	75,0	62,3	62,3	55,6
heating	Thermal power (3)	kW	4,55	6,08	7,81	10,1	10,1	11,8	11,8	14,1	14,1	16,3	16,3	17,9
heating	*Power input* (3)	kW	0,95	1,35	1,78	2,28	2,28	2,73	2,73	2,91	2,91	3,49	3,49	4,07
heating	COP (3)	W/W	4,78	4,51	4,38	4,43	4,43	4,32	4,32	4,85	4,85	4,67	4,67	4,40
heating	Thermal power (4)	kW	4,47	5,88	7,58	9,76	9,76	11,47	11,47	13,56	13,56	15,77	15,77	17,32
heating	*Power input* (4)	kW	1,17	1,66	2,17	2,80	2,80	3,33	3,33	3,55	3,55	4,24	4,24	4,92
heating	COP (4)	W/W	3,82	3,54	3,50	3,48	3,48	3,44	3,44	3,82	3,82	3,72	3,72	3,52
heating	SCOP (6)	W/W	4,52	4,46	4,46	4,53	4,53	4,47	4,47	4,48	4,48	4,49	4,49	4,46
heating	Water flow (4)	l/s	0,22	0,28	0,37	0,47	0,47	0,55	0,55	0,65	0,65	0,76	0,76	0,83
heating	Heat exchanger pressure (4)	kPa	80,0	75,8	66,3	55,2	55,2	43,4	43,4	63,6	63,6	48,5	48,5	37,3
	Energy efficiency (water 35 °C)								A+++/A++					
	Compressor type								Twin Rotary DC Inverter					
	Number of compressors	n°	1	1	1	1	1	1	1	1	1	1	1	1
	Refrigerant circuits	n°	1	1	1	1	1	1	1	1	1	1	1	1
	Refrigerant charge 1 (4)	kg	1,5	1,5	1,5	2,5	2,5	2,5	2,5	3,6	3,6	4	4	4
	Water connections	inch	1"	1"	1"									1"
	Minimum water volume (8)	L	35	40	40	50	50	60	60	60	60	70	70	70
	Sound power (9)	dB(A)	64	64	64	64	64	65	65	68	68	68	68	68
	Sound pressure (10)	dB(A)	49,8	49,8	49,8	49,4	49,4	50,4	50,4	52,7	52,7	52,7	52,7	52,7
	Power supply			230V/1 /50Hz			400V/3P+N +T/50Hz	230V/1 /50Hz	400V/3P+N +T/50Hz	230V/1 /50Hz	400V/3P+N +T/50Hz	230V/1 /50Hz	400V/3P+N +T/50Hz	400V/3P+N +T/50Hz
	Maximum *power input*	kW	2,9	3,5	3,9	4,6	4,6	5,1	5,1	6,6	6,6	7,0	7,0	8,3
	Maximum *current input*	A	12,6	15,1	17,0	20,2	6,6	22,1	7,3	28,6	9,5	30,4	10,1	12,0
	Gross weight	kg	84	84	84	110	110	110	110	134	148	140	154	154
	Operating weight	kg	72	72	72	96	96	96	96	121	136	126	141	141

Operating conditions:, see page 183

Dimensions MWA1-A en MWA1-A/H (40-85 kW)

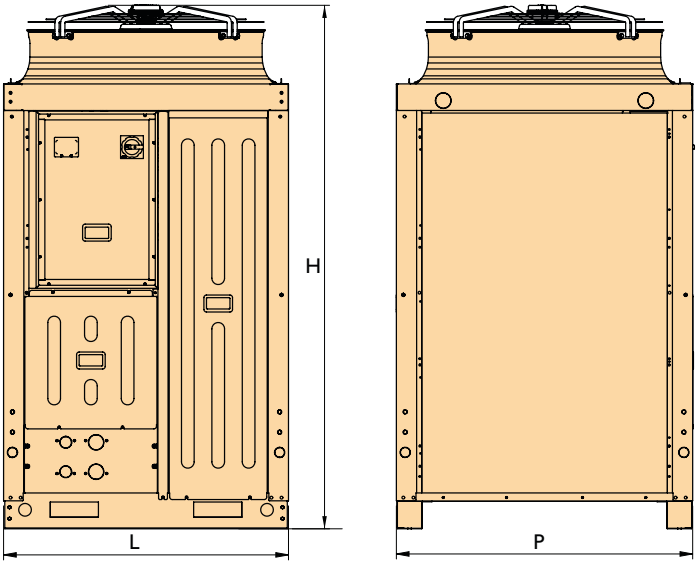

Type		0140	0147	0260	027	0285
L	mm	1125	1125	1125	1125	1125
P	mm	1170	1170	1170	1170	1170
H	mm	2040	2040	2070	2070	2070

Technical information MWA1-A (40-85 kW)

Type		0140	0147	0260	0273	0285
Cooling capacity (11)	kW	39,7	46,8	60,8	73,3	86,5
Power input (11)	kW	12,5	15,1	19,3	24,8	29,3
EER (11)	W/W	3,16	3,11	3,16	2,95	2,96
Cooling capacity (12)	kW	54,4	63,5	81,9	99,4	116,3
Power input (12)	kW	14,3	17,0	21,9	28,0	33,3
EER (12)	W/W	3,80	3,74	3,75	3,55	3,50
SEER (5)	W/W	3,80	3,80	4,05	3,98	4,14
Cooling capacity (13)	kW	22,7	27,0	36,2	42,9	51,1
Power input (13)	kW	11,4	13,5	16,9	22,1	25,7
EER (13)	W/W	1,99	2,01	2,14	1,94	1,99
Water flow (11)	L/s	1,90	2,24	2,92	3,51	4,14
Pressure drop (11)	kPa	54,08	51,68	56,79	46,43	50,41
Compressor type		Scroll	Scroll	Scroll	Scroll	Scroll
Number of compressors	n°	1	1	2	2	2
Refrigerant circuits	n°	1	1	1	1	1
Refrigerant charge (7)	kg	7,8	7,8	12,8	13,4	14,6
Nominal air flow	m^3/s	4,04/5,32	3,88/5,23	4,15/5,44	4,86/6,01	7,4
Maximum pressure hydronic kit	bar	6	6	6	6	6
Water connections	inch	2”	2”	2”	2”	2”
Minimum water volume (8)	L	330	380	260	380	490
Sound power (9)	dB(A)	81	81	82	83	84
Sound pressure (10)	dB(A)	49,3	49,3	50,3	51,3	52,3
Power supply				400V/3P+N+T/50Hz		
Maximum *power input*	kW	17,0	21,5	28,0	35,0	43,0
Maximum *current input*	A	28,0	38,0	45,0	56,0	71,0
Gross weight	kg	365	375	470	495	510
Operating weight	kg	350	360	455	480	495

Operating conditions:, see page 183

Technical information MWA1-A/H (40-85 kW)

	Type		0140	0147	0260	0273	0285
cooling	Cooling capacity (1)	kW	38,6	45,6	58,6	71,2	80,2
	Power input (1)	kW	13,0	15,7	19,9	24,6	29,2
	EER (1)	W/W	2,97	2,91	2,94	2,90	2,75
	Cooling capacity (2)	kW	51,8	60,6	77,7	94,1	106,4
	Power input (2)	kW	14,7	17,6	22,6	28,0	33,3
	EER (2)	W/W	3,53	3,43	3,43	3,37	3,20
	SEER (5)	W/W	3,82	3,8	3,94	3,98	4,07
	Water flow (1)	L/s	1,86	2,20	2,83	3,41	3,84
	Pressure drop (1)	kPa	55,8	56,6	61,5	63,7	66,6
heating	Thermal power (3)	kW	43,5	48,2	64,1	80,9	88,7
	Power input (3)	kW	10,7	12,3	15,6	20,0	22,7
	COP (3)	W/W	4,05	3,92	4,10	4,05	3,90
	Thermal power (4)	kW	42,1	47,8	63,0	74,9	84,6
	Power input (4)	kW	12,8	14,8	18,8	23,3	28,5
	COP (4)	W/W	3,28	3,23	3,35	3,22	2,97
	SCOP (6)	W/W	3,49	3,34	3,85	3,84	3,70
	Water flow (4)	l/s	2,02	2,30	3,03	3,60	4,07
	Heat exchanger pressure (4)	kPa	84,4	81,6	84,1	81,5	84,1
	Energy efficiency (water 35 °C)		A+	A+	A++	A++	A+
	Compressor type		Scroll	Scroll	Scroll	Scroll	Scroll
	Number of compressors	n°	1	1	2	2	2
	Refrigerant circuits	n°	1	1	1	1	1
	Refrigerant charge (7)	kg	9,98	9,98	14	15,25	15,6
	Nominal air flow	m^3/s	4,3	5,3	6,3	6,9	7,4
	Maximum pressure hydronic kit	bar	6	6	6	6	6
	Water connections	inch	2”	2”	2”	2”	2”
	Minimum water volume (8)	L	330	380	260	380	490
	Sound power (9)	dB(A)	84	85	88	88	88
	Sound pressure (10)	dB(A)	52,3	53,3	56,3	56,3	56,3
	Power supply				400V/3P+N+T/50Hz		
	Maximum *power input*	kW	17,0	21,5	28,0	35,0	43,0
	Maximum *current input*	A	28,0	38,0	45,0	56,0	71,0
	Gross weight	kg	400	420	520	545	555
	Operating weight	kg	390	410	505	530	540

Operating conditions:, see page 183

Dimensions MWA1-A (106-349 kW)

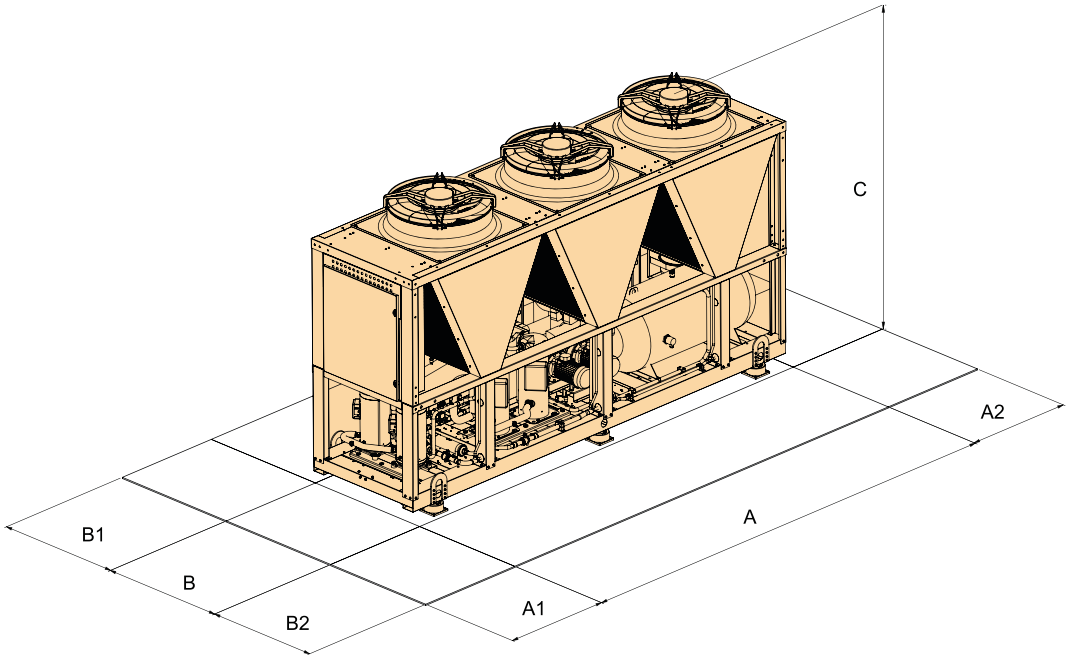

Type	Dimensions (mm)			Recommended free space (mm)				Heat exchanger	
	A	B	C	A1	A2	B1	B2	Type	Ø
02106	2860	1100	2350	1000	800	1000	1000	Victaulic	DN65 (2” 1/2)
02120	2860	1100	2350	1000	800	1000	1000	Victaulic	DN65 (2” 1/2)
02128	2860	1100	2350	1000	800	1000	1000	Victaulic	DN65 (2” 1/2)
02140	4060	1100	2350	1000	800	1000	1000	Victaulic	DN65 (2” 1/2)
04155	4060	1100	2350	1000	800	1000	1000	Victaulic	DN80 (3”)
04177	4060	1100	2350	1000	800	1000	1000	Victaulic	DN80 (3”)
04184	4060	1100	2350	1000	800	1000	1000	Victaulic	DN80 (3”)
04209	2860	2200	2350	1000	800	1000	1000	Victaulic	DN80 (3”)
04239	2860	2200	2350	1000	800	1000	1000	Victaulic	DN80 (3”)
04258	2860	2200	2350	1000	800	1000	1000	Victaulic	DN80 (3”)
04305	4060	2200	2350	1000	800	1000	1000	Victaulic	DN80 (3”)
04349	4060	2200	2350	1000	800	1000	1000	Victaulic	DN80 (3”)

Technical information MWA1-A (106-349 kW)

Type		02106	02120	02128	02140	04155	04177
Cooling capacity (1)	kW	105,3	119,2	127,9	139,3	155,0	176,5
Power input (1)	kW	33,6	38,3	44,0	44,3	49,9	56,8
EER (1)	W/W	3,14	3,11	2,91	3,15	3,11	3,11
Cooling capacity (2)	kW	139,4	155,9	164,8	184,9	204,4	231,0
Power input (2)	kW	35,8	40,9	46,9	47,5	52,9	60,9
EER (2)	W/W	3,90	3,81	3,51	3,89	3,87	3,79
SEER (5)	W/W	4,05	4,03	3,80	4,27	4,11	4,00
Cooling capacity (13)	kW	61,9	70,6	76,3	82,0	91,5	103,4
Power input (13)	kW	29,9	34,1	39,1	39,5	45,4	50,8
EER (13)	W/W	2,07	2,07	1,95	2,08	2,02	2,04
Water flow (1)	L/s	5,11	5,82	6,19	6,45	7,19	8,25
Pressure drop (1)	kPa	18,02	21,48	24,50	27,84	21,08	17,27
Compressor type		Scroll	Scroll	Scroll	Scroll	Scroll	Scroll
Number of compressors	n°	2	2	2	2	4	4
Refrigerant circuits	n°	1	1	1	1	2	2
Refrigerant charge 1 (7)	kg	12	12	12	17	11	11
Refrigerant charge 2 (7)	kg	-	-	-	-	9	9
Nominal air flow	l/s	10142	10200	10520	14649	14467	15072
Number of fans	n°	2	2	2	3	3	3
Maximum pressure hydronic kit	bar	6	6	6	6	6	6
Minimum water volume (8)	L	420	530	530	690	400	520
Sound power (9)	dB(A)	86(SL) 85/ (SSL)83	86/(SL) 85/ (SSL)83	87/(SL) 86/ (SSL)84	87/(SL) 86/ (SSL)84	87/(SL) 86/ (SSL)84	88/(SL) 87/ (SSL)85
Sound pressure (10)	dB(A)	54/(SL) 53/ (SSL) 51	54/(SL) 53/ (SSL) 51	55/(SL) 54/ (SSL) 52	54,9/(SL) 53,9/(SSL) 51,9	54,9/(SL) 53,9/(SSL) 51,9	55,9/(SL) 54,9/(SSL) 52,9
Power supply				400V/3P/50Hz			
Maximum *power input*	kW	48,9	55,0	61,1	66,9	82,4	87,4
Maximum *current input*	A	83,0	93,4	103,8	113,5	139,9	148,3
Gross weight	kg	1.080	1.080	1.090	1.510	1.620	1.620
Operating weight	kg	1.090	1.090	1.100	1.520	1.630	1.630

Type		04184	04209	04239	04258	04305	04349
Cooling capacity (1)	kW	183,2	208,4	238,1	257,1	304,8	348,9
Power input (1)	kW	62,9	67,1	76,8	88,6	98,3	112,1
EER (1)	W/W	2,91	3,11	3,10	2,90	3,10	3,11
Cooling capacity (2)	kW	240,4	278,6	314,3	334,8	405,3	460,6
Power input (2)	kW	67,9	71,7	81,9	94,8	105,2	121,2
EER (2)	W/W	3,54	3,89	3,84	3,53	3,85	3,80
SEER (5)	W/W	3,97	4,07	4,24	3,83	4,16	4,03
Cooling capacity (13)	kW	108,9	122,9	144,1	157,1	183,8	210,6
Power input (13)	kW	55,8	59,7	68,8	79,2	88,5	100,5
EER (13)	W/W	1,95	2,06	2,09	1,98	2,08	2,10
Water flow (1)	L/s	8,92	10,10	11,40	12,47	14,69	16,31
Pressure drop (1)	kPa	19,87	25,54	34,23	40,86	31,97	27,47
Compressor type		Scroll	Scroll	Scroll	Scroll	Scroll	Scroll
Number of compressors	n°	4	4	4	4	4	4
Refrigerant circuits	n°	2	2	2	2	2	2
Refrigerant charge 1 (7)	kg	11	11	12	12	18	19
Refrigerant charge 2 (7)	kg	9	11	12	12	19	19
Nominal air flow	l/s	15054	19713	20471	21067	29279	30351
Number of fans	n°	3	4	4	4	6	6
Maximum pressure hydronic kit	bar	6	6	6	6	6	6
Minimum water volume (8)	L	520	520	650	650	850	850
Sound power (9)	dB(A)	88/(SL) 87/ (SSL)85	88/(SL) 87/ (SSL)85	88/(SL) 87/ (SSL)85	88/(SL) 87/ (SSL)85	88/(SL) 87/ (SSL)85	90/(SL) 89/ (SSL)87
Sound pressure (10)	dB(A)	55,9/(SL) 54,9/(SSL) 52,9	55,9/(SL) 54,9/(SSL) 52,9	55,9/(SL) 54,9/(SSL) 52,9	55,9/(SL) 54,9/(SSL) 52,9	55,8/(SL) 54,8/(SSL) 52,8	57,8/(SL) 56,8/(SSL) 54,8
Power supply				400V/3P/50Hz			
Maximum *power input*	kW	90,9	97,8	110,0	122,3	146,0	165,8
Maximum *current input*	A	154,3	166,0	186,8	207,6	247,8	281,4
Gross weight	kg	1.620	1.950	1.960	1.960	2.670	2.850
Operating weight	kg	1.630	1.960	1.970	1.980	2.690	2.870

Operating conditions:, see page 183

Dimensions MWA1-A/H (109-345 kW)

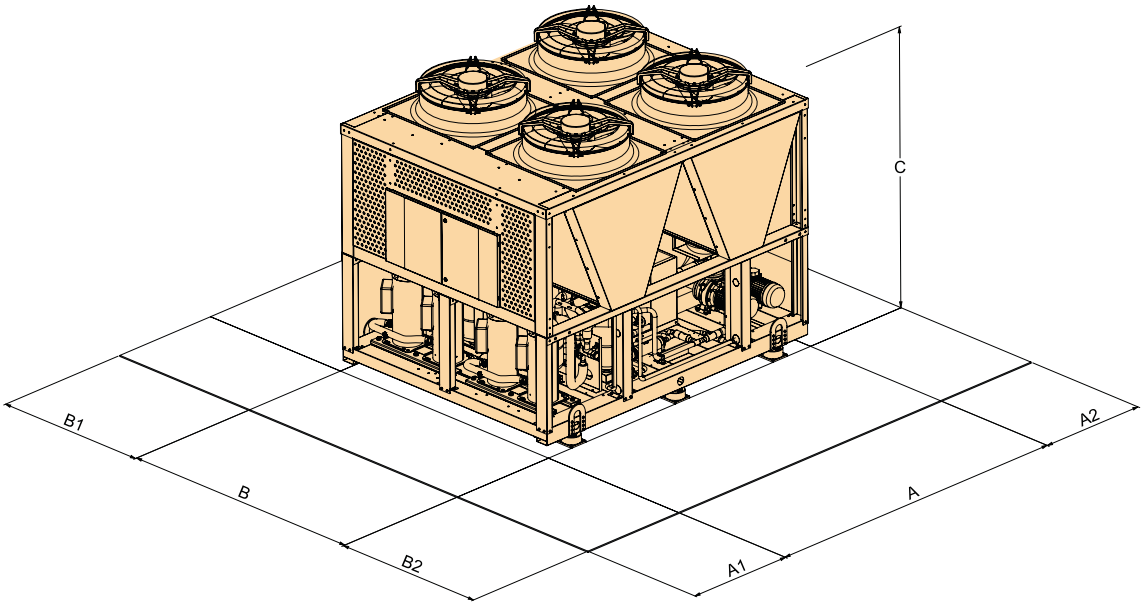

Type	Dimensions (mm)			Recommended free space (mm)				Heat exchanger	
	A	B	C	A1	A2	B1	B2	Type	Ø
02109	2860	1100	2350	1000	800	1000	1000	Victaulic	DN65 (2” 1/2)
02121	2860	1100	2350	1000	800	1000	1000	Victaulic	DN65 (2” 1/2)
02142	4060	1100	2350	1000	800	1000	1000	Victaulic	DN65 (2” 1/2)
02148	4060	1100	2350	1000	800	1000	1000	Victaulic	DN65 (2” 1/2)
02160	4060	1100	2350	1000	800	1000	1000	Victaulic	DN65 (2” 1/2)
04176	2860	2200	2350	1000	800	1000	1000	Victaulic	DN80 (3”)
04199	2860	2200	2350	1000	800	1000	1000	Victaulic	DN80 (3”)
04215	2860	2200	2350	1000	800	1000	1000	Victaulic	DN80 (3”)
04237	2860	2200	2350	1000	800	1000	1000	Victaulic	DN80 (3”)
04273	4060	2200	2350	1000	800	1000	1000	Victaulic	DN80 (3”)
04304	4060	2200	2350	1000	800	1000	1000	Victaulic	DN80 (3”)
04345	4060	2200	2350	1000	800	1000	1000	Victaulic	DN80 (3”)

Technical information MWA1-A/H (109-345 kW)

	Type		02109	02121	02142	02148	02160	04176
cooling	Cooling capacity (1)	kW	102,8	113,1	131,8	137,9	148,1	165,3
	Power input (1)	kW	33,8	38,9	41,3	44,4	49,8	52,6
	EER (1)	W/W	3,05	2,90	3,19	3,11	2,97	3,14
	Cooling capacity (2)	kW	139,0	150,6	177,0	187,8	202,4	223,6
	Power input (2)	kW	36,5	42,7	44,1	47,7	53,0	55,7
	EER (2)	W/W	3,81	3,53	4,01	3,94	3,82	4,01
	SEER (5)	W/W	4,35	4,36	4,38	4,73	4,50	4,61
	Water flow (1)	L/s	4,92	5,41	6,31	6,61	7,09	7,90
	Pressure drop (1)	kPa	21,65	20,13	26,53	24,3	20,21	21,7
heating	Thermal power (3)	kW	112,6	125,1	147,8	154,1	166,2	187,6
	Power input (3)	kW	27,6	30,9	36,6	37,7	41,4	46,0
	COP (3)	W/W	4,09	4,05	4,04	4,08	4,01	4,08
	Thermal power (4)	kW	108,3	120,1	141,5	147,9	159,7	179,1
	Power input (4)	kW	32,9	37,5	43,9	45,3	49,4	55,9
	COP (4)	W/W	3,30	3,20	3,22	3,26	3,23	3,21
	SCOP (6)	W/W	3,72	3,77	3,62	3,69	3,68	3,90
	Water flow (4)	l/s	5,20	5,78	6,80	6,96	7,68	8,62
	Heat exchanger pressure (4)	kPa	24,16	22,92	30,61	28,4	24,03	26,63
	Energy efficiency (water 35 °C)		A+/A+	A+/A+	A+/A+	A+/A+	A+/A+	A++/A+
	Compressor type		Scroll	Scroll	Scroll	Scroll	Scroll	Scroll
	Number of compressors	n°	2	2	2	2	2	4
	Refrigerant circuits	n°	1	1	1	1	1	2
	Refrigerant charge 1 (7)	kg	28	33	33	42	42	23
	Refrigerant charge 2 (7)	kg	-	-	-	-	-	23
	Nominal air flow	l/s	10021	9984	15109	15088	15045	20954
	Number of fans	n°	2	2	3	3	3	4
	Maximum pressure hydronic kit	bar	6	6	6	6	6	6
	Minimum water volume (8)	L	490	630	630	820	820	480
	Sound power (9)	dB(A)	88/(SL) 87/ (SSL) 84	88/(SL) 87/ (SSL) 84	88/(SL) 87/ (SSL) 84	88/(SL) 87/ (SSL) 84	88/(SL) 87/ (SSL) 84	89/(SL) 88/ (SSL) 85
	Sound pressure (10)	dB(A)	56/(SL) 55/ (SSL) 52	56/(SL) 55/ (SSL) 52	55,9/(SL) 54,9/(SSL) 51,9	55,9/(SL) 54,9/(SSL) 51,9	55,9/(SL) 54,9/(SSL) 51,9	56,9/(SL) 55,9/(SSL) 52,9
	Power supply				400V/3P/50Hz			
	Maximum *power input*	kW	48,9	55,0	63,1	66,9	73,0	87,9
	Maximum *current input*	A	83,0	93,4	107,1	113,5	123,9	149,2
	Gross weight	kg	1.180	1.210	1.470	1.530	1.530	2.030
	Operating weight	kg	1.190	1.220	1.480	1.540	1.540	2.040

Operating conditions:, see page 183

	Type		04199	04215	04237	04273	04304	04345
cooling	Cooling capacity (1)	kW	186,9	208,3	224,8	259,6	289,1	324,6
	Power input (1)	kW	59,4	67,2	77,5	80,6	92,9	111,9
	EER (1)	W/W	3,15	3,10	2,90	3,22	3,10	2,90
	Cooling capacity (2)	kW	252,0	282,0	301,1	351,2	387,5	433,8
	Power input (2)	kW	63,8	71,6	83,2	87,0	100,5	121,8
	EER (2)	W/W	3,95	3,94	3,62	4,04	3,86	3,56
	SEER (3)	W/W	4,64	4,71	4,53	4,65	4,73	4,42
	Water flow (1)	L/s	8,94	9,97	10,76	12,42	13,81	15,53
	Pressure drop (1)	kPa	26,48	24,66	27,21	18,78	24,85	17,91
heating	Thermal power (3)	kW	207,3	223,0	245,9	285,8	316,1	356,1
	Power input (3)	kW	50,7	54,8	61,1	69,2	78,3	88,5
	COP (3)	W/W	4,09	4,07	4,02	4,13	4,04	4,02
	Thermal power (4)	kW	198,1	214,1	236,7	273,0	303,3	344,4
	Power input (4)	kW	61,5	66,0	74,0	83,8	94,7	107,6
	COP (4)	W/W	3,22	3,24	3,20	3,26	3,20	3,20
	SCOP (6)	W/W	3,84	3,96	4,00	3,92	3,95	4,01
	Water flow (4)	l/s	9,54	10,29	11,38	13,13	14,59	16,57
	Heat exchanger pressure (4)	kPa	31,94	27,61	30,53	22,86	29,13	22,26
	Energy efficiency (water 35 °C)		A++/A+	A++/A+	A++/A+	A++/A+	A++/A+	A++/A+
	Compressor type		Scroll	Scroll	Scroll	Scroll	Scroll	Scroll
	Number of compressors	n°	4	4	4	4	4	4
	Refrigerant circuits	n°	2	2	2	2	2	2
	Refrigerant charge 1 (7)	kg	23	30	31	45	59	61
	Refrigerant charge 2 (7)	kg	23	30	31	35	32	32
	Nominal air flow	l/s	20888	20815	20738	31370	31264	31109
	Number of fans	n°	4	4	4	6	6	6
	Maximum pressure hydronic kit	bar	6	6	6	6	6	6
	Minimum water volume (8)	L	610	610	780	1.020	1.020	1.290
	Sound power (9)	dB(A)	89/(SL) 88/ (SSL) 85	89/(SL) 88/ (SSL) 85	90/(SL) 89/ (SSL) 86	90/(SL) 89/ (SSL) 86	91/(SL) 90/ (SSL) 87	92/(SL) 91/ (SSL) 88
	Sound pressure (10)	dB(A)	56,9/(SL) 55,9/(SSL) 52,9	56,9/(SL) 55,9/(SSL) 52,9	57,9/(SL) 56,9/(SSL) 53,9	57,8/(SL) 56,8/(SSL) 53,8	58,8/(SL) 57,8/(SSL) 54,8	59,8/(SL) 58,8/(SSL) 55,8
	Power supply				400V/3P/50Hz			
	Maximum *power input*	kW	92,8	97,8	110,0	123,8	139,8	160,1
	Maximum *current input*	A	157,6	166,0	186,8	210,2	237,4	271,8
	Gross weight	kg	2.060	2.100	2.130	2.680	2.880	2.900
	Operating weight	kg	2.070	2.110	2.140	2.700	2.900	2.930

Operating conditions:
(1) Cooling: outdoor air temperature 35 °C; water temperature inlet/outlet 12/7 °C.
(2) Cooling: outdoor air temperature 35 °C; water temperature inlet/outlet 23/18 °C.
(3) Heating: outdoor air temperature 7 °C d.b. 6°C w.b.; water temperature inlet/outlet 30/35 °C.
(4) Heating: outdoor air temperature 7 °C d.b. 6°C w.b.; water temperature inlet/outlet 40/45 °C.
(5) Internal exchanger water reference temperature = 12/7 °C.
(6) Heating: average climatic conditions; Tbiv = -7 °C; water temperature in/out 30/35 °C.
(7) Indicative data and subject to change. For the correct data, always refer to the technical label on the unit.
(8) The calculated value of minimum volume of water at the plant does not consider the volume of water contained in the internal exchanger (evaporator). With low external air temperature applications or low average loads required, the minimum volume of water to the system is obtained by doubling the indicated value.
(9) Condition (3); value determined on the basis of measurements carried out in accordance with the UNI EN ISO 9614-2 standard, in compliance with the requirements of the Eurovent certification.
(10) Value calculated from the sound power level using ISO 3744: 2010, referred to 10 m distance from the unit.
(11) Internal exchanger water temperature = 12/7 °C, air entering the external heat exchanger 35 °C.
(12) Internal exchanger water temperature = 23/18 °C, air entering the external heat exchanger 35 °C.
(13) Cooling version BT: outdoor air temperature 35 °C, internal exchanger water temperature = -3 / -8 °C. Fluid treated with 35% ethylene glycol.

N.B. The performance data are indicative and could be subject to change. In addition, the performances declared in apex (1), (2), and (8) refer to the instantaneous power according to EN 14511. The declared data stated in the apex (6) is determined according to the UNI EN 14825.

Wide range of heat pumps with various applications

Mark Climate Technology also has the energy-efficient TOSHIBA heat pumps in its program. These DX heat pumps are fully compatible with the Mark AIRSTREAM heat recovery units and the Mark air handling units. The heat pumps are also available separately.

Applications:
- Combination with DX battery in an air handling unit for cooling and / or heating.
- Combination with DX air curtains.

Benefits:
- High energy efficiency, distinctive partial load efficiencies and therefore high S(easonal)COPs
- A high and highly valued reliability.
- Inverter controlled Twin-Rotary compressor technology with individual control, low starting currents and a very large control range.
- Technical support

AIR-WATER HEAT PUMPS
Also available are Air-Water heat pumps, which are still able to heat with the nominal capacity at an outside temperature of up to -15 °C.

DX HEAT PUMPS

Type		RAV-GM301ATP	RAV-GM401ATP	RAV-GM561ATP	RAV-GM801ATP
Nominal cooling capacity	kW	2,5	3,6	5,0	6,7
Nominal heating capacity	kW	3,4	4,0	5,3	7,7
Cool power range	kW	0,9 - 3,0	0,9 - 4,0	1,5 - 5,6	1,5 - 8,0
Heat power range	kW	0,8 - 4,5	0,8 - 5,0	1,5 - 6,3	1,5 - 9,0
SEER		5,94	5,76	6,34	5,81
SCOP		5,48	5,08	5,29	4,79
Heating capacity at -10°C	kW	2,92	3,25	4,09	5,85
Electrical connection	V/ph/Hz	230/1/50	230/1/50	230/1/50	230/1/50
Insurance value	A	16	16	16	16
Air quantity	m³/h	1.800	2.200	2.400	2.700
Power condenser fan	W	43	43	43	43
Sound pressure level cooling / heating	dB(A)	38/39	41/42	40/42	42/46
Cooling / heating sound power	dB(A)	61/62	64/65	63/65	65/69
Dimensions H x W x D	mm	550x780x290	550x780x290	550x780x290	550x780x290
Weight	kg	33	39	40	44
Minimum outdoor temperature cooling / heating	°C	-15/ -15	-15/ -15	-15/ -15	-15/ -15
Refrigeration connection	flare	1/4" x 3/8"	1/4" x 1/2"	1/4" x 1/2"	3/8" x 5/8"
Cooling pipe length max.	m	15/20*	15/20*	20/30*	20/30*
Maximum height difference	m	10	10	30	30
Refrigerant content R32	kg	0,63	0,9	0,9	1,3
Extra refrigerant	g/m	20	20	20	20
Article number		0699500	0699501	0699502	0699503
Price	€	1.439	1.656	2.174	2.691

*With extra refrigerant charge

Type		RAV-GM901ATP	RAV-GM1101ATP	RAV-GM1401ATP	RAV-GP1601AT8
Nominal cooling capacity	kW	8,0	9,5	12,0	14,0
Nominal heating capacity	kW	9,0	11,2	13,0	16,0
Cool power range	kW	1,9 - 8,8	3,0 - 11,2	3,0 - 13,2	2,6 - 16
Heat power range	kW	1,6 - 9,9	3,0 - 13,0	3,0 - 16,0	2,4 - 19,0
SEER		7,0	6,15	5,71	6,72 (EER)
SCOP		5,22	4,71	4,69	4,82 (COP)
Heating capacity at -10°C	kW	6,43	8,45	10,40	13,14
Electrical connection	V/ph/Hz	230/1/50	230/1/50	230/1/50	400/3-N/50
Insurance value	A	16	20	25	3 x 16
Air quantity	m³/h	2.900	4.080	4.200	6.180
Power condenser fan	W	45	100	100	2 x 100
Sound pressure level cooling / heating	dB(A)	43/47	47/51	47/51	45/47
Cooling / heating sound power	dB(A)	68/72	70/74	70/74	68/70
Dimensions H x W x D	mm	630x800x300	890x900x320	890x900x320	1.340x900x320
Weight	kg	47	68	68	95
Minimum outdoor temperature cooling / heating	°C	-15/ -15	-15/ -15	-15/ -15	-15/ -20
Refrigeration connection	flare	3/8" x 5/8"	3/8" x 5/8"	3/8" x 5/8"	3/8" x 5/8"
Cooling pipe length max.	m	30/50*	30/50*	30/50*	30/75*
Maximum height difference	m	30	30	30	30
Refrigerant content R32	kg	2,0 (R32)	2,1 (R32)	2,1 (R32)	2,6 (R410A)
Extra refrigerant	g/m	20	40	40	40
Article number		0699507	0699504	0699505	0699506
Price	€	2.900	3.685	4.192	6.200

*With extra refrigerant charge

DX HEAT PUMPS

Type		RAV-GP561ATP	RAV-GP801ATP	RAV-GP1101AT	RAV-GP1401AT
Nominal cooling capacity	kW	5,0	7,1	10,0	12,5
Nominal heating capacity	kW	5,6	8,0	11,2	14,0
Cool power range	kW	1,2 - 5,6	1,9 - 8,0	3,1 - 12,0	3,1 - 14,0
Heat power range	kW	0,9 - 8,1	1,3 - 11,3	2,6 - 13,0	2,6 - 16,5
SEER		7,61	8,8	8,65	8,15
SCOP		5,54	6,48	5,87	5,79
Heating capacity at -10°C	kW	4,79	6,84	9,89	12,17
Electrical connection	V/ph/Hz	230/1/50	230/1/50	230/1/50	230/1/50
Insurance value	A	16	16	25	25
Air quantity	m³/h	2.250	3.180	6.960	6.960
Power condenser fan	W	43	60	2 x 100	2 x 100
Sound pressure level cooling / heating	dB(A)	40/42	40/42	43/44	44/45
Cooling / heating sound power	dB(A)	63/65	63/65	66/67	67/68
Dimensions H x W x D	mm	630x799x299	1.050x1.010x370	1.550x1.010x370	1.550x1.010x370
Weight	kg	45	74	104	104
Minimum outdoor temperature cooling / heating	°C	-15/ -27	-15/ -27	-15/ -27	-15/ -27
Refrigeration connection	flare	1/4" x 1/2"	3/8" x 5/8"	3/8" x 5/8"	3/8" x 5/8"
Cooling pipe length max.	m	20/50*	30/50*	30/75*	30/75*
Maximum height difference	m	30	30	30	30
Refrigerant content R32	kg	1,35	1,9	3,1	3,1
Extra refrigerant	g/m	20	40	40	40
Article number		0699512	0699513	0699514	0699515
Price	€	3.177	3.954	5.506	6.075

*With extra refrigerant charge

Type		RAV-GM1101AT8P	RAV-GM1401AT8P	RAV-GM1601AT8P	RAV-GM2241AT8	RAV-GM2801AT8
Nominal cooling capacity	kW	9,5	12,0	14,0	20,0	23,5
Nominal heating capacity	kW	11,2	12,8	16,0	22,4	27,0
Cool power range	kW	3,0 - 11,2	3,0 - 13,2	3,0 - 16,0	4,6 - 22,4	4,6 - 27,0
Heat power range	kW	3,0 - 13,0	3,0 - 16,0	3,0 - 18,0	4,6 - 25,0	4,6 - 31,5
SEER		6,15	5,71	6,3	6,53	6,21
SCOP		4,71	4,69	4,71	4,41	4,67
Heating capacity at -10°C	kW	8,45	10,4	11,7	16,95	21,57
Electrical connection	V/ph/Hz	400/3-N/50	400/3-N/50	400/3-N/50	400/3-N/50	400/3-N/50
Insurance value	A	3x10	3x10	3x16	3 x 20	3 x 25
Air quantity	m³/h	4.080	4.200	6.900	9150	10.890
Power condenser fan	W	2x100	2x100	2x100	2 x 100	2 x 100
Sound pressure level cooling / heating	dB(A)	47/51	47/51	45/47	53/53	55/57
Cooling / heating sound power	dB(A)	70/74	70/74	70/72	76/76	78/80
Dimensions H x W x D	mm	890x900x320	890x900x320	1.340x900x320	1.550x1.010x370	1.550x1.010x370
Weight	kg	69	69	94	142	142
Minimum outdoor temperature cooling / heating	°C	-15/ -15	-15/ -15	-15/ -15	-15/ -27	-15/ -27
Refrigeration connection	flare	3/8" x 5/8"	3/8" x 5/8"	3/8" x 5/8"	1/2" x 1 1/8"	1/2" x 1 1/8"
Cooling pipe length max.	m	30/50*	30/50*	30/50*	30/60*	30/60*
Maximum height difference	m	30	30	30	30	30
Refrigerant content R32	kg	2,1	2,1	2,4	5	5
Extra refrigerant	g/m	40	40	40	80	80
Article number		0699520	0699521	0699522	0699527	0699528
Price	€	3.685	4.192	5.890	9.895	11.126

*With extra refrigerant charge

AIR-WATER HEAT PUMPS

	Type		HWS-P805HR	HWS-P1105HR	HWS-P805H8R	HWS-P1105H8R	HWS-P1405H8R
heating	Nominal heating capacity*	kW	8,0	11,2	8,0	11,2	14,0
	Power consumption*	kW	1,68	2,29	1,71	2,33	3,15
	Water outlet temperature	°C	20-60	20-60	20-60	20-60	20-60
	Heating capacity -7 °C/-15 °C	kW	11,92 / 9,37	12,79 / 11,23	10,82 / 8,18	11,62 / 9,26	13,44 / 10,7
	COP		4,76	4,88	4,68	4,80	4,44
cooling	Nominal cooling capacity*	kW	6,0	10,0	6,0	10,0	11,0
	Power consumption*	kW	1,64	3,33	1,64	3,33	3,9
	Water outlet temperature	°C	7-25	7-25	7-25	7-25	7-25
	Annual energy consumption heating	kWh	5.881	5.523	5.372	5.476	6.588
	Energy label heating		A+++	A+++	A+++	A+++	A+++
	SCOP		4,01	4,48	4,31	4,43	4,43
	Fuse	A	20	25	3 x 16	3 x 16	3 x 16
	Electrical connection	V/ph/Hz	230/1/50	230/1/50	400/3-N/50	400/3-N/50	400/3-N/50
	Compressor type		DC Twin Rotary	DC Twin Rotary	DC Twin Rotary	DC Twin Rotary	DC Twin Rotary
	Connections (gas-fluid)	flare	5/8" x 3/8"	5/8" x 3/8"	5/8" x 3/8"	5/8" x 3/8"	5/8" x 3/8"
	Sound pressure level **	dB(A)	47	47	47	48	49
	Dimensions (H x W x D)	mm	1.340x900x320	1.340x900x320	1.340x900x320	1.340x900x320	1.340x900x320
	Weight	kg	92	92	94	94	94
	Minimum outdoor temperature cooling / heating	°C	10/-25	10/-25	10/-25	10/-25	10/-25
	Minimum pipe length	m	5	5	5	5	5
	Maximum pipe length	m	30	30	30	30	30
	Maximum height difference	m	30	30	30	30	30
	Pipe length without refill	m	30	30	30	30	30
	Refrigerant		R410A	R410A	R410A	R410A	R410A
	Article number		0699550	0699551	0699555	0699556	0699557
	Price	€	9.814	10.709	10.285	11.240	12.163

* These capacities apply under the following conditions and are in accordance with standard EN14511:
Heating: hot water outlet temperature: 35°C (ΔT 5°C), outside temperature: 7°C DB / 6 °C WB.
Cooling: cold water outlet temperature: 7°C (ΔT 5°C), outside temperature: 35°C DB.
** The sound pressure level is specified at 2 m distance in free field conditions.

Dry coolers: Single row of fans

The Mark AWS is a series of Dry Coolers with a single row of fans. Both the standard version and the low-noise version are available in cooling capacities from 44 kW to 217 kW.

The AWS Dry Coolers are compact and robust. They are made of galvanized steel for both horizontal and vertical mounting using the correct kit. The units are equipped with anchor and lifting points for placement.

The chassis and housing are fully protected with a paint layer with a high corrosion resistance that offers maximum weather resistance. The parts are each coated in RAL 9002 prior to assembly.

Mark single row Dry Coolers are equipped with heat exchangers with a copper tube and aluminum fins. They are equipped with a steel threaded connection.

The fans incorporate 3-phase asynchronous external rotor motors with IP54 protection level, class F insulation, with the possibility of connecting them in star or delta, having in this way two speeds of operation.

Adaptation to the most restrictive noise conditions, this range of fan motors is available with a different number of poles.

Features Mark AWS
- Optimized heat exchangers and fans
- Compact
- Quiet
- Robust
- Economical
- Completely wired up to the terminal box

Dimensions

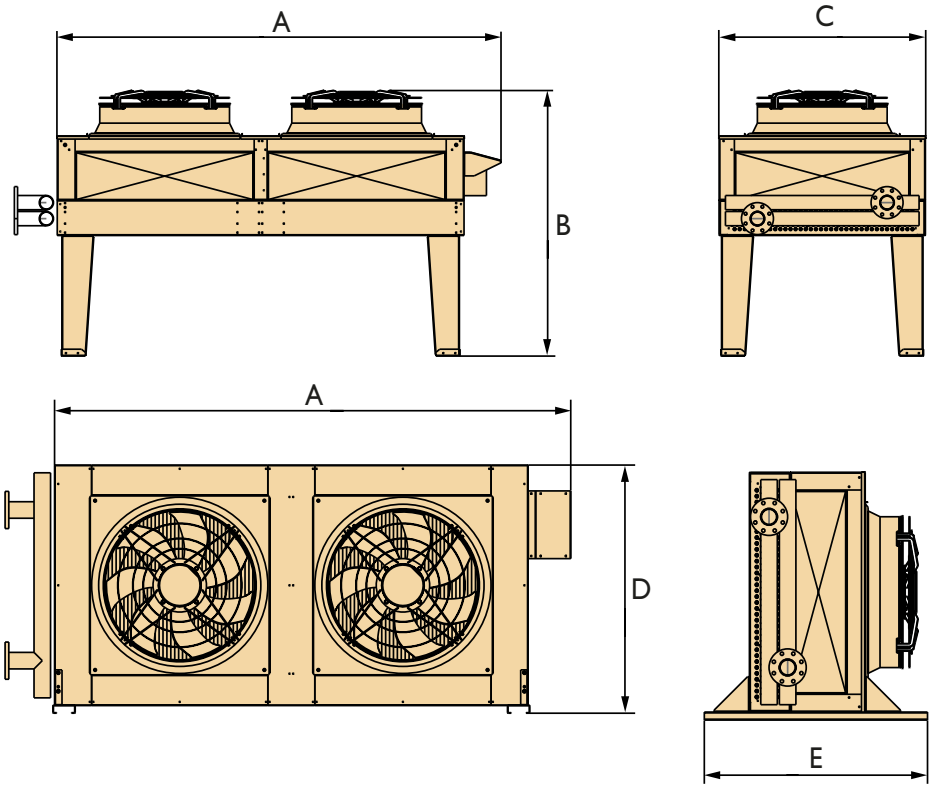

AWSN series - Ø 800 mm fans - standard version

Type	Number of fans	Surface	Internal volume	Connection	A	B	C	D	E	Weight
		m²	dm³	Ø	mm	mm	mm	mm	mm	kg
AWSN-41C-044M		99	13							271
AWSN-41D-051M	1	132	17	2"	1575	1660	1295	1335	1200	283
AWSN-41E-054M		164	21							294
AWSN-42C-090M		197	26							471
AWSN-42D-102M	2	263	35	3"	2775	1660	1295	1335	1200	495
AWSN-42E-108M		329	43							518
AWSN-43C-135M		296	39							648
AWSN-43D-154M	3	395	52	3"	3975	1660	1295	1335	1200	682
AWSN-43E-163M		493	64							718
AWSN-44C-181M		395	52							854
AWSN-44D-205M	4	526	69	4"	5175	1660	1295	1335	1200	900
AWSN-44E-217M		658	87							947

AWSB series - Ø 800 mm fans - low noise fans

Type	Number of fans	Surface	Internal volume	Connection	A	B	C	D	E	Weight
		m²	dm³	Ø	mm	mm	mm	mm	mm	kg
AWSB-41C-035M		99	13							266
AWSB-41D-039M	1	132	17	2"	1575	1660	1295	1335	1200	278
AWSB-41E-040M		164	21							289
AWSB-42C-070M		197	26							461
AWSB-42D-077M	2	263	35	3"	2775	1660	1295	1335	1200	484
AWSB-42E-081M		329	43							508
AWSB-43C-106M		296	39							632
AWSB-43D-117M	3	395	52	3"	3975	1660	1295	1335	1200	667
AWSB-43E-122M		493	64							702
AWSB-44C-140M		395	52							833
AWSB-44D-155M	4	526	69	4"	5175	1660	1295	1335	1200	880
AWSB-44E-162M		658	87							927

AWSN series - Ø 910 mm fans - standard version

Type	Number of fans	Surface	Internal volume	Connection	A	B	C	D	E	Weight
		m²	dm³	Ø	mm	mm	mm	mm	mm	kg
AWSN-51C-71L	1	180	24	2"	2175	1768	1747	1588	1260	404
AWSN-51D-81L		241	32							425
AWSN-51F-90L		362	48							470
AWSN-52C-142L	2	362	48	2 1/2"	3975	1768	1747	1588	1260	664
AWSN-52D-162L		482	63							708
AWSN-52F-181L		724	95							795
AWSN-53C-221L	3	543	71	3"	5775	1768	1747	1588	1260	960
AWSN-53D-251L		724	95							1024
AWSN-53F-279L		1086	143							1152
AWSN-54C-262L	4	817	94	4"	7575	1768	1747	1588	1260	1255
AWSN-54D-308L		1089	125							1335
AWSN-54F-365L		1634	188							1494
AWSN-55C-333L	5	1021	117	4"	9375	1768	1747	1588	1260	1540
AWSN-55D-391L		1361	156							1640
AWSN-55F-462L		2042	234							1838
AWSN-56F-560L	6	2450	281	4"	11175	1768	1747	1588	1260	2183

Technical information

AWSN series - Ø 800 mm fans - standard version

Type	~ 400v/50 Hz Connection Δ					~ 400v/50 Hz Connection Y				
	Capacity	Mass flow	Pressure drop	Power con-sumption	Sound	Capacity	Mass flow	Pressure drop	Power con-sumption	Sound
	kW	m³/h	kPa	kW	dB(A)	kW	m³/h	kPa	kW	dB(A)
AWSN-41C-044M	44	8	23	1,94	47	37	6	16	1,21	42
AWSN-41D-051M	51	9	38		48	41	7	26		43
AWSN-41E-054M	54	9	31		50	43	7	20		44
AWSN-42C-090M	90	16	33	3,88	50	74	13	23	2,42	45
AWSN-42D-102M	102	18	34		51	82	14	23		46
AWSN-42E-108M	108	19	26		53	85	15	17		47
AWSN-43C-135M	135	24	36	5,82	52	111	19	25	3,63	46
AWSN-43D-154M	154	27	43		53	124	22	29		48
AWSN-43E-163M	163	28	37		54	129	22	24		49
AWSN-44C-181M	181	32	42	7,76	53	150	26	30	4,84	48
AWSN-44D-205M	205	36	37		54	165	29	26		49
AWSN-44E-217M	217	38	34		56	171	30	22		50

Room (environment) temperature = 25 °C. Water inlet T = 40 °C. Water outlet T = 35 °C.

AWSB series - Ø 800 mm fans - low noise fans

Type	~ 400v/50 Hz Connection Δ					~ 400v/50 Hz Connection Y				
	Capacity	Mass flow	Pressure drop	Power con-sumption	Sound	Capacity	Mass flow	Pressure drop	Power con-sumption	Sound
	kW	m³/h	kPa	kW	dB(A)	kW	m³/h	kPa	kW	dB(A)
AWSB-41C-035M	35	6	29	0,83	39	30	5	22	0,50	34
AWSB-41D-039M	39	7	23	0,83	40	32	6	17	0,50	35
AWSB-41E-040M	40	7	18	0,83	41	33	6	13	0,50	36
AWSB-42C-070M	70	12	31	1,66	42	60	10	24	1,00	37
AWSB-42D-077M	77	14	21	1,66	43	65	11	15	1,00	38
AWSB-42E-081M	81	14	15	1,66	44	66	12	11	1,00	39
AWSB-43C-106M	106	18	34	2,94	44	91	16	26	1,50	39
AWSB-43D-117M	117	20	26	2,49	45	98	17	19	1,50	40
AWSB-43E-122M	123	21	22	2,49	46	100	17	15	1,50	41
AWSB-44C-140M	140	24	27	3,32	45	120	21	20	2,00	40
AWSB-44D-155M	155	27	22	3,32	46	130	23	17	2,00	41
AWSB-44E-162M	162	28	20	3,32	47	133	23	14	2,00	42

Room (environment) temperature = 25 °C. Water inlet T = 40 °C. Water outlet T = 35 °C.

AWSN series - Ø 910 mm fans - standard version

Type	~ 400v/50 Hz Connection Δ					~ 400v/50 Hz Connection Y				
	Capacity	Mass flow	Pressure drop	Power con-sumption	Sound	Capacity	Mass flow	Pressure drop	Power con-sumption	Sound
	kW	m³/h	kPa	kW	dB(A)	kW	m³/h	kPa	kW	dB(A)
AWSN-51C-71L	71	12	20		49	59	10	14		43
AWSN-51D-81L	81	14	18	2,48	49	66	11	12	1,57	43
AWSN-51F-90L	90	16	14		49	72	12	9		44
AWSN-52C-142L	142	25	20		52	118	21	14		46
AWSN-52D-162L	162	28	19	4,96	52	132	23	13	3,14	46
AWSN-52F-181L	181	31	17		52	144	25	11		47
AWSN-53C-221L	221	38	52		53	184	32	38		48
AWSN-53D-251L	251	44	43	7,44	54	205	35	30	4,71	48
AWSN-53F-279L	279	48	32		54	223	39	21		49
AWSN-54C-262L	262	46	61		55	223	39	46		49
AWSN-54D-308L	308	53	51	9,92	55	259	45	37	6,28	49
AWSN-54F-365L	365	63	37		55	299	52	26		49
AWSN-55C-333L	333	58	114		56	283	49	86		50
AWSN-55D-391L	391	68	94	12,4	56	328	57	69	7,85	50
AWSN-55F-462L	462	80	68		56	378	66	47		50
AWSN-56F-560L	560	97	111	14,88	56	457	79	77	9,42	51

Room (environment) temperature = 25 °C. Water inlet T = 40 °C. Water outlet T = 35 °C.

Dry coolers: Double row of fans

The Mark AWD is a series of Dry Coolers with a double row of fans. Both the standard version and the low-noise version are available in cooling capacities from 163 kW to 763 kW.

The AWD Dry Coolers are compact and robust. They are made of galvanized steel for both horizontal and vertical mounting using the correct kit. The units are equipped with anchor and lifting points for placement.

The chassis and housing are fully protected with a paint layer with a high corrosion resistance that offers maximum weather resistance. The parts are each coated in RAL 9002 prior to assembly.

Mark double row Dry Coolers are equipped with heat exchangers with a copper tube and aluminum fins. They are equipped with a steel threaded connection.

The fans incorporate 3-phase asynchronous external rotor motors with IP54 protection level, class F insulation, with the possibility of connecting them in star or delta, having in this way two speeds of operation.

Adaptation to the most restrictive noise conditions, this range of fan motors is available with a different number of poles.

Features Mark AWD
- Optimized EC fans
- Stainless steel housing
- Multi circuit water connection
- Compact
- Quiet
- Robust
- Economical
- Completely wired up to the terminal box

Dimensions

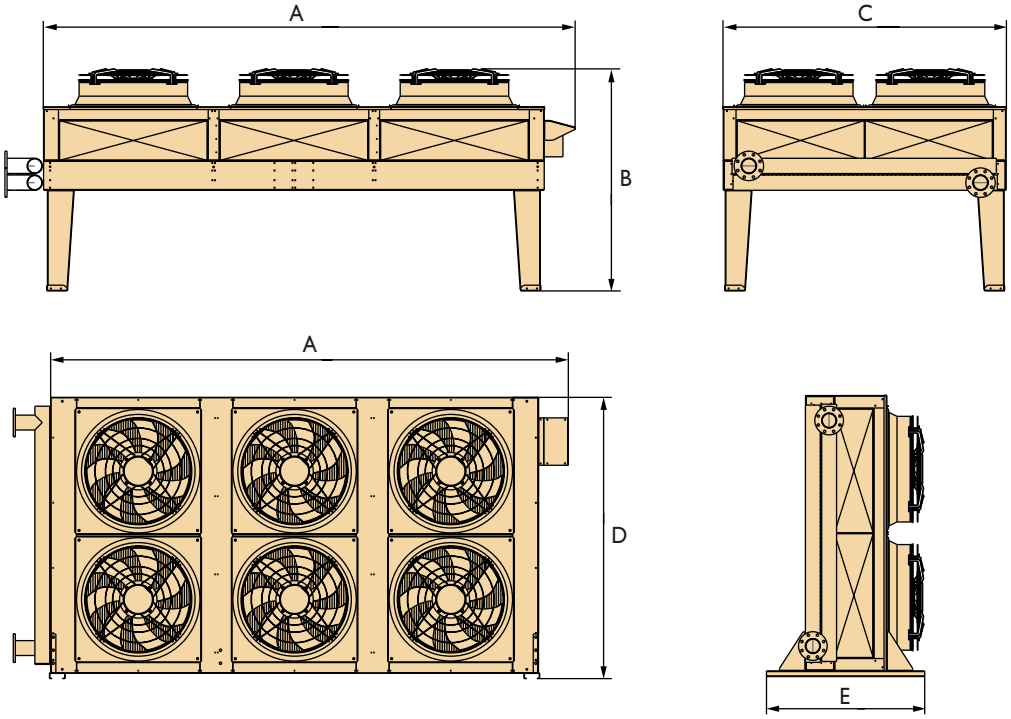

AWDN series - Ø 800 mm fans - standard version

Type	Number of fans	Surface	Internal volume	Connection	A	B	C	D	E	Weight
		m²	dm³	Ø	mm	mm	mm	mm	mm	kg
AWDN-44C-163M		340	45							691
AWDN-44D-184M	4	453	60	3"	2775	1660	2120	2160	1215	732
AWDN-44E-194M		566	74							772
AWDN-46C-245M		509	67							1145
AWDN-46D-276M	6	680	90	4"	3975	1660	2120	2160	1215	1265
AWDN-46E-293M		850	112							1385
AWDN-48C-330M		680	90							1263
AWDN-48D-368M	8	907	119	4"	8175	1660	2120	2160	1215	1345
AWDN-48E-391M		1133	149							1425

AWDB series - Ø 800 mm fans - low noise fans

Type	Number of fans	Surface	Internal volume	Connection	A	B	C	D	E	Weight
		m²	dm³	Ø	mm	mm	mm	mm	mm	kg
AWDB-44C-130M		340	45							670
AWDB-44D-141M	4	453	60	3"	2775	1660	2120	2160	1215	712
AWDB-44E-145M		566	74							752
AWDB-46C-195M		509	67							1115
AWDB46D-211M	6	680	90	4"	3975	1660	2120	2160	1215	1235
AWDB-46E-219M		850	112							1355
AWDB-48C-259M		680	90							1223
AWDB-48D-281M	8	907	119	4"	8175	1660	2120	2160	1215	1305
AWDB-48E-293M		1133	149							1385

AWDN series - Ø 910 mm fans - standard version

Type	Number of fans	Surface	Internal volume	Connection	A	B	C	D	E	Weight
		m²	dm³	Ø	mm	mm	mm	mm	mm	kg
AWDN-54C-244L	4	542	71	3"	3975	1761	2246	2287	1275	912
AWDN-54D-276L		723	95							977
AWDN-54F-304L		1085	143							1107
AWDN-56C-379L	6	814	107	4"	5775	1761	2246	2287	1275	1311
AWDN-56D-428L		1085	143							1407
AWDN-56F-470L		1628	214							1599
AWDN-58C-431L	8	1157	132	4"	7575	1761	2246	2287	1275	1633
AWDN-58D-510L		1542	177							1746
AWDN-58F-602L		2314	265							1972
AWDN-510D-647L	10	1928	221	4"	9375	1761	2246	2287	1275	2140
AWDN-510F-763L		2892	332							2422

Technical information

AWDN series - Ø 800 mm fans - standard version

Type	~ 400v/50 Hz Connection Δ					~ 400v/50 Hz Connection Y				
	Capacity	Mass flow	Pressure drop	Power con-sumption	Sound	Capacity	Mass flow	Pressure drop	Power con-sumption	Sound
	kW	m³/h	kPa	kW	dB(A)	kW	m³/h	kPa	kW	dB(A)
AWDN-44C-163M	163	28	37		54	134	23	26		49
AWDN-44D-184M	184	32	42	7,76	56	148	26	29	4,84	50
AWDN-44E-194M	194	34	34		57	153	27	22		52
AWDN-46C-245M	245	43	36		56	201	35	25		50
AWDN-46D-276M	276	48	39	11,64	57	222	39	26	7,26	52
AWDN-46E-293M	293	51	38		59	230	40	25		53
AWDN-48C-330M	330	57	51		57	271	47	36		52
AWDN-48D-368M	368	64	40	15,52	59	296	52	27	9,68	53
AWDN-48E-391M	391	68	45		60	308	54	29		55

Room (environment) temperature = 25 °C. Water inlet T = 40 °C. Water outlet T = 35 °C.

AWDB series - Ø 800 mm fans - low noise fans

Type	~ 400v/50 Hz Connection Δ					~ 400v/50 Hz Connection Y				
	Capacity	Mass flow	Pressure drop	Power con-sumption	Sound	Capacity	Mass flow	Pressure drop	Power con-sumption	Sound
	kW	m³/h	kPa	kW	dB(A)	kW	m³/h	kPa	kW	dB(A)
AWDB-44C-130M	130	23	36		46	111	19	27		40
AWDB-44D-141M	141	24	26	3,32	48	116	20	18	2	42
AWDB-44E-145M	145	25	21		49	118	21	14		43
AWDB-46C-195M	195	34	37		47	167	29	28		42
AWDB46D-211M	211	37	24	4,98	49	174	30	17	3	44
AWDB-46E-219M	219	38	23		51	178	31	16		45
AWDB-48C-259M	259	45	33		49	222	39	25		43
AWDB-48D-281M	281	49	25	6,64	51	232	40	18	4	45
AWDB-48E-293M	293	51	27		51	238	41	18		46

Room (environment) temperature = 25 °C. Water inlet T = 40 °C. Water outlet T = 35 °C.

AWDN series - Ø 910 mm fans - standard version

Type	~ 400v/50 Hz Connection Δ					~ 400v/50 Hz Connection Y				
	Capacity	Mass flow	Pressure drop	Power con-sumption	Sound	Capacity	Mass flow	Pressure drop	Power con-sumption	Sound
	kW	m³/h	kPa	kW	dB(A)	kW	m³/h	kPa	kW	dB(A)
AWDN-54C-244L	244	42	28		55	204	34	20		49
AWDN-54D-276L	276	47	26	9,92	56	227	39	18	6,28	50
AWDN-54F-304L	304	52	23		58	242	42	15		52
AWDN-56C-379L	379	65	65		57	316	54	47		51
AWDN-56D-428L	428	74	52	14,88	57	351	61	37	9,42	52
AWDN-56F-470L	470	81	36		59	374	64	24		54
AWDN-58C-431L	431	74	84		58	371	64	65		52
AWDN-58D-510L	509	88	74	19,84	58	432	75	55	12,56	52
AWDN-58F-602L	602	104	59		59	494	85	41		54
AWDN-510D-647L	646	112	136	24,8	59	547	95	101	15,7	53
AWDN-510F-763L	763	132	105		60	626	108	73		55

Room (environment) temperature = 25 °C. Water inlet T = 40 °C. Water outlet T = 35 °C.

V-Dry coolers with a single row of fans

De Mark AWSV is a serie of Dry Coolers with two coils and a single row of fans, arranged in a "V-shape". Both the standard version and the low-noise version are available in cooling capacities from 130 kW to 964 kW. Larger capacities on request.

The AWSV Dry Coolers are compact and robust. They are made of galvanized steel for both horizontal and vertical mounting using the correct kit. The units are equipped with anchor and lifting points for placement.

The chassis and housing are fully protected with a paint layer with a high corrosion resistance that offers maximum weather resistance. The parts are each coated in RAL 9002 prior to assembly.

Mark single row V-Dry Coolers are equipped with heat exchangers with a copper tube and aluminum fins. They are equipped with a steel threaded connection.

The fans incorporate 3-phase asynchronous external rotor motors with IP54 protection level, class F insulation, with the possibility of connecting them in star or delta, having in this way two speeds of operation.

Features Mark AWSV
- Optimized EC fans
- Multi circuit water connection
- Compact
- Quiet
- Robust
- Economical
- Completely wired up to the terminal box

Dimensions

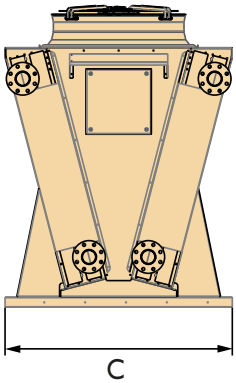

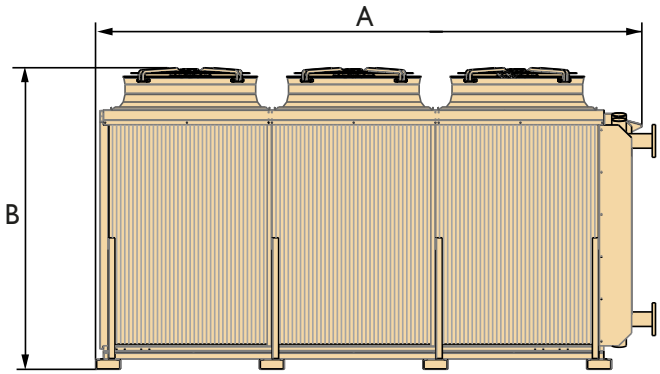

AWSVN series - Ø 800 mm fans - standard version

Type	Number of fans	Surface	Internal volume	Connection	A	B	C	Weight
		m²	dm³	Ø	mm	mm	mm	kg
AWSVN-42C-130M	2	402	53	2”	2342	1875	1390	710
AWSVN-42D-148M		536	70					757
AWSVN-43C-195M	3	603	79	2”	3342	1875	1390	1029
AWSVN-43D-222M		804	106					1100
AWSVN-44C-261M	4	804	106	2” 1/2	4342	1875	1390	1275
AWSVN-44D-296M		1072	141					1370
AWSVN-45C-326M	5	1005	132	2” 1/2	5342	1875	1390	1560
AWSVN-45D-371M		1340	177					1679
AWSVN-46C-392M	6	1206	159	3”	6342	1875	1390	1834
AWSVN-46D-445M		1608	212					1976

AWSVB series - Ø 800 mm fans - low noise fans

Type	Number of fans	Surface	Internal volume	Connection	A	B	C	Weight
		m²	dm³	Ø	mm	mm	mm	kg
AWSVB-42C-97M	2	402	53	2”	2342	1875	1390	700
AWSVB-42D-108M		536	70					747
AWSVB-43C-146M	3	603	79	2”	3342	1875	1390	1014
AWSVB-43D-162M		804	106					1085
AWSVB-44C-195M	4	804	106	2” 1/2	4342	1875	1390	1255
AWSVB-44D-217M		1072	141					1350
AWSVB-45C-244M	5	1005	132	2” 1/2	5342	1875	1390	1535
AWSVB-45D-272M		1340	177					1654
AWSVB-46C-293M	6	1206	159	3”	6342	1875	1390	1804
AWSVB-46D-326M		1608	212					1946

AWSVN series - Ø 910 mm fans - standard version

Type	Number of fans	Surface	Internal volume	Connection	A	B	C	Weight
		m²	dm³	Ø	mm	mm	mm	kg
AWSVN-52C-195M	2	712	93	2" 1/2	3425	2047	1390	993
AWSVN-52D-220M		950	125					1076
AWSVN-52F-244M		1425	187					1242
AWSVN-53C-287M	3	1069	140	2" 1/2	4925	2047	1390	1405
AWSVN-53D-324M		1425	187					1531
AWSVN-53F-361M		2138	281					1781
AWSVN-54C-390M	4	1425	187	3"	6425	2047	1390	1919
AWSVN-54D-439M		190	250					2085
AWSVN-54F-488M		2851	375					2417
AWSVN-55C-493M	5	1781	234	4"	7925	2047	1390	2159
AWSVN-55D-555M		2375	312					2365
AWSVN-55F-615M		3563	469					2777
AWSVN-56C-535M	6	2382	273	4"	9425	2047	1390	2492
AWSVN-56D-618M		3176	364					2720
AWSVN-56F-715M		4624	546					3177
AWSVN-57C-629M	7	2779	319	4"	10925	2047	1390	2870
AWSVN-57D-727M		3705	425					3136
AWSVN-57F-840M		5558	638					3667
AWSVN-58D-835M	8	4235	486	5"	12425	2047	1390	3551
AWSVN-58F-964M		6353	729					4158

Technical information

AWSVN series - Ø 800 mm fans - standard version

Type	~ 400v/50 Hz Connection Δ					~ 400v/50 Hz Connection Y				
	Capacity	Mass flow	Pressure drop	Power con-sumption	Sound	Capacity	Mass flow	Pressure drop	Power con-sumption	Sound
	kW	m³/h	kPa	kW	dB(A)	kW	m³/h	kPa	kW	dB(A)
AWSVN-42C-130M	130	23	37	3,88	49	106	18	26	2,42	43
AWSVN-42D-148M	148	26				118	21	25		
AWSVN-43C-195M	195	34	38	5,82	51	159	28	27	3,63	45
AWSVN-43D-222M	222	39				177	31	26		
AWSVN-44C-261M	261	45	40	7,76	52	212	37	28	4,84	46
AWSVN-44D-296M	296	52				237	41	27		
AWSVN-45C-326M	326	57	44	9,7	53	266	46	31	6,05	47
AWSVN-45D-371M	371	64	45			297	52	30		
AWSVN-46C-392M	392	68	48	11,64	54	319	56	34	7,26	48
AWSVN-46D-445M	445	77	50			356	62	34		

Room (environment) temperature = 25 °C. Water inlet T = 40 °C. Water outlet T = 35 °C.

AWSVB series - Ø 800 mm fans - low noise fans

Type	~ 400v/50 Hz Connection Δ					~ 400v/50 Hz Connection Y				
	Capacity	Mass flow	Pressure drop	Power con-sumption	Sound	Capacity	Mass flow	Pressure drop	Power con-sumption	Sound
	kW	m³/h	kPa	kW	dB(A)	kW	m³/h	kPa	kW	dB(A)
AWSVB-42C-97M	97	17	22	1,66	41	85	15	17	1	38
AWSVB-42D-108M	108	19	21			93	16	16		37
AWSVB-43C-146M	146	25	23	2,49	43	128	22	18	1,5	39
AWSVB-43D-162M	162	28	22			140	24	17		39
AWSVB-44C-195M	195	34	24	3,32	44	170	30	19	2	41
AWSVB-44D-217M	217	38	23			187	32	18		40
AWSVB-45C-244M	244	42	26	4,15	45	213	37	21	2,5	41
AWSVB-45D-272M	272	47	26			234	41	20		41
AWSVB-46C-293M	293	51	29	4,98	46	256	45	23	3	42
AWSVB-46D-326M	326	57	29			281	49	22		42

Room (environment) temperature = 25 °C. Water inlet T = 40 °C. Water outlet T = 35 °C.

AWSVN series - Ø 910 mm fans - standard version

Type	~ 400v/50 Hz Connection Δ					~ 400v/50 Hz Connection Y				
	Capacity	Mass flow	Pressure drop	Power con-sumption	Sound	Capacity	Mass flow	Pressure drop	Power con-sumption	Sound
	kW	m³/h	kPa	kW	dB(A)	kW	m³/h	kPa	kW	dB(A)
AWSVN-52C-195M	195	33	34	4,96	53	160	27	24	3,14	47
AWSVN-52D-220M	220	38	27		52	177	30	19		47
AWSVN-52F-244M	244	42	18		52	193	33	12		47
AWSVN-53C-287M	287	49	20	7,44	54	235	40	14	4,71	49
AWSVN-53D-324M	324	56	18		54	262	45	12		49
AWSVN-53F-361M	361	62	16		54	286	49	10		48
AWSVN-54C-390M	390	57	36	9,92	56	320	55	25	6,28	50
AWSVN-54D-439M	439	76	30		55	355	61	20		50
AWSVN-54F-488M	488	84	31		55	386	67	20		50
AWSVN-55C-493M	493	85	59	12,4	56	404	70	42	7,85	51
AWSVN-55D-555M	555	96	45		56	448	77	31		51
AWSVN-55F-615M	615	106	29		56	487	84	19		50
AWSVN-56C-535M	535	92	60	14,88	58	447	77	44	9,42	52
AWSVN-56D-618M	618	107	49		57	510	88	35		52
AWSVN-56F-715M	715	124	34		57	575	99	23		52
AWSVN-57C-629M	629	109	92	17,36	58	526	91	67	10,99	53
AWSVN-57D-727M	727	126	75		58	599	104	53		52
AWSVN-57F-840M	840	145	52		58	675	117	35		52
AWSVN-58D-835M	835	144	108	19,84	59	688	119	76	12,56	53
AWSVN-58F-964M	964	167	74		58	775	134	50		53

Room (environment) temperature = 25 °C. Water inlet T = 40 °C. Water outlet T = 35 °C.

AWS-EPA Adiabatic Dry Coolers

The Mark AWS-EPA adiabatic series is a range of Dry Coolers with an integrated adiabatic precooler. This pre-cooling system is used to cool ambient air before it enters the coil, thereby ensuring an increase in cooling capacity and large energy savings.

The adiabatic dry coolers allow to obtain the following temperatures in the heat exchanger:
- DRY AREAS: 15°C below the maximum outside temperature.
- MEDIUM AND WET AREAS: between 10°C and 5°C below the maximum outside temperature.

Water temperature target: 28-32°C.

The chassis and housing are fully protected with a paint layer with a high corrosion resistance that offers maximum weather resistance. The parts are each coated in RAL 9002 prior to assembly.

Features Mark AWS-EPA
- Energy saving
- Water saving
- High efficiency evaporation
- Maintenance friendly
- Environmentally friendly
- Legionella proof
- Good controls

Dimensions AWSN-EPA series

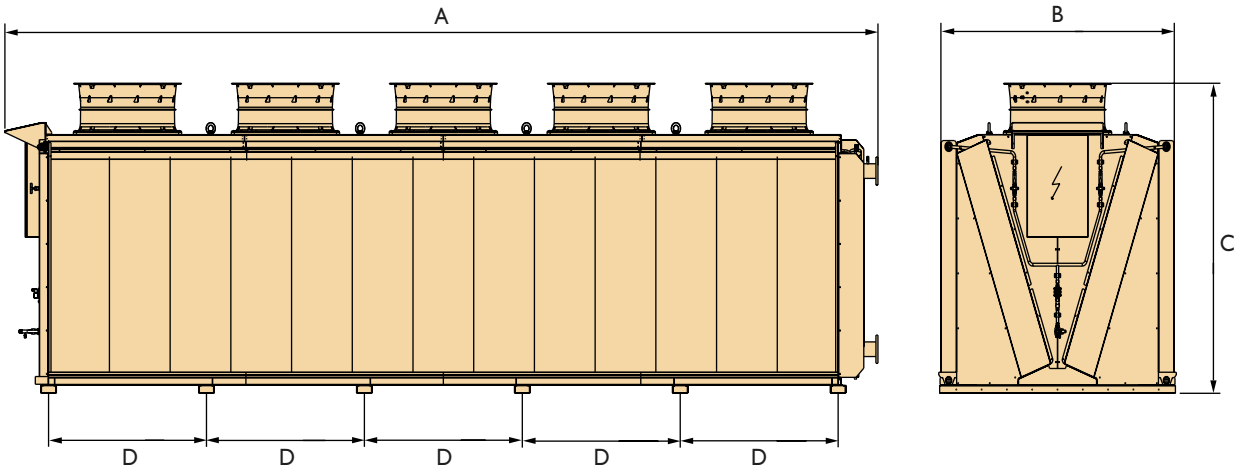

AWSN-EPA series - Ø 910 mm fans - standard version

Type	Number of fans	Surface	Internal volume	A	B	C	D
		m²	dm³	mm	mm	mm	mm
AWSN-EPA-52E-A/B/C	2	868	134	3118	2230	2421	1200
AWSN-EPA-53E-A/B/C	3	1302	202	4318	2230	2421	1200
AWSN-EPA-54E-A/B/C	4	1736	270	5518	2230	2421	1200
AWSN-EPA-55E-A/B/C	5	2170	337	6718	2230	2421	1200

Technical information

AWSN-EPA series - Ø 910 mm fans - standard version - Dry Environments

Type	~ 400v/50 Hz Connection						
	Capacity	Mass flow	Pressure drop	Power consumption	Sound	Connection	Weight
	kW	m³/h	kPa	kW	dB(A)	Ø	kg
AWSN-EPA-52E-A	209	36	36	8	58	2" 1/2	1390
AWSN-EPA-53E-A	314	54	39	12	60	2" 1/2	1920
AWSN-EPA-54E-A	424	73	77	16	61	3"	2690
AWSN-EPA-55E-A	517	90	29	20	62	3"	3120

Water inlet T = 35 °C. Water outlet T = 30 °C.

AWSN-EPA series - Ø 910 mm fans - standard version - Medium Environments

Type	~ 400v/50 Hz Connection						
	Capacity	Mass flow	Pressure drop	Power consumption	Sound	Connection	Weight
	kW	m³/h	kPa	kW	dB(A)	Ø	kg
AWSN-EPA-52E-A	154	27	25	8	58	2"	1380
AWSN-EPA-53E-A	231	40	31	12	60	2"	1910
AWSN-EPA-54E-A	313	54	49	16	61	2" 1/2	2615
AWSN-EPA-55E-A	379	66	22	20	62	2" 1/2	3005

Water inlet T = 35 °C. Water outlet T = 30 °C.

AWSN-EPA series - Ø 910 mm fans - standard version - Wet-Coastal Environments

Type	~ 400v/50 Hz Connection						
	Capacity	Mass flow	Pressure drop	Power consumption	Sound	Connection	Weight
	kW	m³/h	kPa	kW	dB(A)	Ø	kg
AWSN-EPA-52E-A	81	14	30	8	58	1" 1/2	1370
AWSN-EPA-53E-A	120	21	29	12	60	1" 1/2	1895
AWSN-EPA-54E-A	164	29	47	16	61	2"	2440
AWSN-EPA-55E-A	202	35	34	20	62	2"	3005

Water inlet T = 35 °C. Water outlet T = 30 °C.

Dimensions AWSD-EPA series

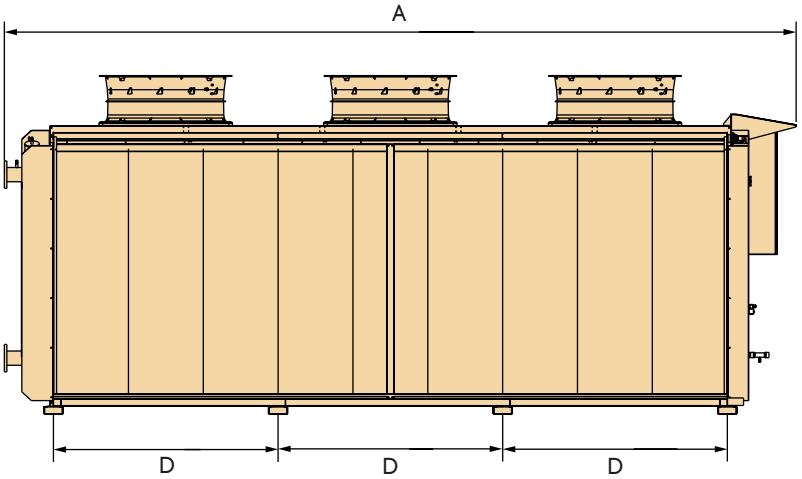

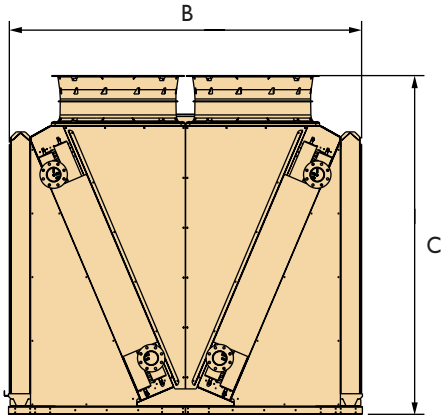

AWSD-EPA series - Ø 910 mm fans - standard version

Type	Number of fans	Surface	Internal volume	A	B	C	D
		m²	dm³	mm	mm	mm	mm
AWSD-EPA-56F-A/B/C	6	2338	293	4468	2837	2715	1250
AWSD-EPA-58F-A/B/C	8	3117	391	5718	2837	2715	1250
AWSD-EPA-510F-A/B/C	10	3896	488	6968	2837	2715	1250

Technical information

AWSD-EPA series - Ø 910 mm fans - standard version - Dry Environments

Type	~ 400v/50 Hz Connection						
	Capacity	Mass flow	Pressure drop	Power consumption	Sound	Connection	Weight
	kW	m³/h	kPa	kW	dB(A)	Ø	kg
AWSD-EPA-56F-A	512	89	41	24	65	3"	2885
AWSD-EPA-58F-A	694	120	73	32	67	4"	3725
AWSD-EPA-510F-A	840	146	27	40	67	4"	4640

Water inlet T = 35 °C. Water outlet T = 30 °C.

AWSD-EPA series - Ø 910 mm fans - standard version - Medium Environments

Type	~ 400v/50 Hz Connection						
	Capacity	Mass flow	Pressure drop	Power consumption	Sound	Connection	Weight
	kW	m³/h	kPa	kW	dB(A)	Ø	kg
AWSD-EPA-56F-A	396	67	62	24	65	3"	2880
AWSD-EPA-58F-A	510	88	50	32	67	3"	3690
AWSD-EPA-510F-A	647	112	79	40	67	4"	4630

Water inlet T = 35 °C. Water outlet T = 30 °C.

AWSD-EPA series - Ø 910 mm fans - standard version - Wet-Coastal Environments

Type	~ 400v/50 Hz Connection						
	Capacity	Mass flow	Pressure drop	Power consumption	Sound	Connection	Weight
	kW	m³/h	kPa	kW	dB(A)	Ø	kg
AWSD-EPA-56F-A	198	34	42	24	65	2" 1/2	2865
AWSD-EPA-58F-A	264	46	44	32	67	2" 1/2	3670
AWSD-EPA-510F-A	338	59	77	40	67	3"	4595

Water inlet T = 35 °C. Water outlet T = 30 °C.

ECOFLEX

BOILER

The high-efficiency boiler of Mark

The Mark ECOFLEX is a very compact and sustainable high-efficiency boiler for industrial use. Available in the following capacities: 168 kW, 210 kW, 252 kW and 294 kW.

The ECOFLEX is suitable to heat offices, garages, warehouses, apartment buildings, workshops, distribution centers and showrooms.

For a complete heating solution from Mark it is also possible to combine the ECOFLEX boiler with water-supplied products such as the TANNER MDA and INFRA AQUA ECO.

Benefits
- Competitive pricing
- Proven and innovative technology
- Cast aluminum heat exchanger
- Robust
- Low-noise
- Advanced diagnostic system
- Very low maintenance interval
- Low service interval
- Integrated pump control
- Closed version available
- Cascade control already integrated
- Weather-dependant control
- Control:
  - On/off thermostat
  - OpenTherm
  - BMS 0-10V control

Technical information

ECOFLEX		HR 168	HR 210	HR 252	HR 294
Nominal input 80/60 °C	kW	32,6-163,6	42-204.5	50,4-245,4	58,8-282,5
Efficiency	%	107	107	107,5	107,5
Operating pressure	bar	6	6	6	6
Weight	kg	193	210	227	244
Supply voltage			230V 1F ~50 Hz		

Dimensions

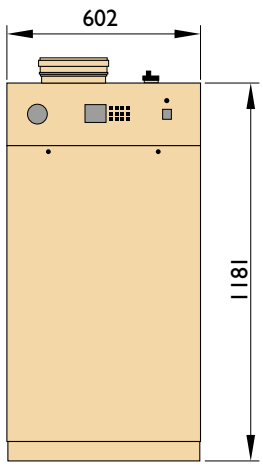

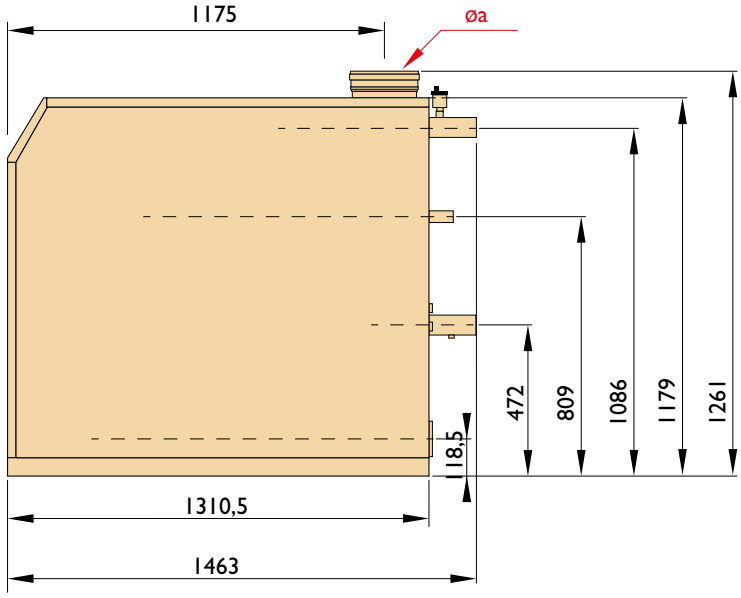

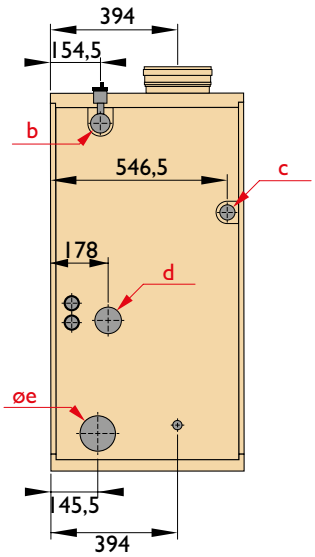

a = Flue gas ø 200mm
b = Supply R2"
c = Gas connection R1"
d = Return R2"
e = Combustion air inlet ø 110mm

Controls

Clock thermostat
0629039

or

Chronotherm Touch
0629077

or

BMS

Prices Mark ECOFLEX

PRODUCT - ECOFLEX - NATURAL GAS G25

Code nr.	Description	Price
5970005	EcoFlex HR 168	€ 8973
5970006	EcoFlex HR 210	€ 10807
5970007	EcoFlex HR 252	€ 14859
5970008	EcoFlex HR 294	€ 17755

Other gas types on request.

ACCESSOIRES - CONTROLS

Code nr.	Description	Price
0629077	Chronotherm Touch (modulating) thermostat	€ 272
0629039	Clock thermostat (1A)	€ 350

Circulation pump on request

ACCESSOIRES - FLUE GAS EXHAUST

Code nr.	Description	Price
5990301	Wall bracket Ø150	€ 5
5990302	TwinSafe + Extension pipe RVS Ø100/150	€ 98
5990303	Sealing EPDM Ø150	€ 8
5990304	Roof flashing PB Ø205 25-45	€ 297
5990305	Adhesive plate ALU Ø370	€ 162
5990306	ALU-Fix Bend AL Ø250 90gr	€ 356
5990307	ALU Fix Bend Ø250 45gr	€ 328
5990308	ALU Fix Extension pipe Ø250 L=1000	€ 183
5990310	ALU Fix Roof terminal AL Ø250 L=1450	€ 891
5990311	Twinline Reducer PP Ø130-150	€ 36
5990312	Air grill AL Ø150 L=180	€ 61
5990313	Roof terminal ALU Ø250 L=2500	€ 1304
5990314	T-piece ALU Ø250-200-350 90gr	€ 371
5990316	ALU Fix Bend AL Ø250 90gr	€ 356
5990317	ALU Fix Bend AL Ø250 45gr	€ 328
5990318	ALU Fix Extension pipe AL Ø250 L=100	€ 194
5990319	Twinline Bend PP Ø200 90gr	€ 98
5990320	Twinline Bend PP Ø200 45gr	€ 89
5990321	Twinline Extension pipe PP Ø200 L=1900	€ 242
5990322	Twinline Extension pipe PP Ø200 L=1000	€ 119
5990323	Twinline Extension pipe PP Ø200 L=500	€ 107
5990324	Twinline Roof terminal PP Ø200 L=500	€ 463
5990326	Bracket Ø200	€ 26
5990327	Fix-Safe Sealing ring Ø250	€ 64
5990328	Sealing ring Sil. Ø200 Blauw	€ 22
5990329	Sealing ring EPDM Ø200	€ 14
5990330	Adhesive plate ALU Ø275	€ 79
5990331	Twinline Bend PP Ø150 90gr	€ 50
5990332	Twinline Bend PP Ø150 45gr	€ 41
5990333	Twinline Extension pipe PP Ø150 L=2000	€ 129
5990334	Twinline Extension pipe PP Ø150 L=1000	€ 72
5990335	Twinline Extension pipe PP Ø150 L=500	€ 50
5990336	Twinline Gradient PP Ø150-150	€ 94
5990337	Single flue set horizontal PP Ø150 black	€ 174
5990342	ALU-Fix Extension pipe AL Ø200 L=500	€ 179
5990343	ALU Fix Extension pipe AL Ø200 L=2000	€ 300
5990344	ALU Fix Bend AL Ø200 90gr	€ 194
5990345	Extension pipe AL Ø200 L=500	€ 95
5990346	Wall terminal AL M2000 Ø200 200-150	€ 924
5990347	Connection kit PP DN200 Compact Condens	€ 397
5990348	Adhesive plate AL Ø210 130/200x150	€ 43
5990349	Adhesive plate AL Ø320	€ 140
5990350	Roof flashing for pitched roof PB Ø318 18-22gr	€ 317
5990351	Roof flashing for pitched roof PB Ø318 58-62gr	€ 350
5990352	Adhesive plate AL Ø150/220x175	€ 62
5990353	Roof flashing for pitched roof PB Ø228 18-22gr	€ 281

The high-efficiency boiler of Mark

The Mark POWERFLEX is a very compact and sustainable high-efficiency boiler for industrial use. Available in capacities from 340 kW to 600 kW.

The POWERFLEX is suitable to heat offices, garages, warehouses, apartment buildings, workshops, distribution centers and showrooms.

For a complete heating solution from Mark it is also possible to combine the POWERFLEX boiler with water-supplied products such as the TANNER MDA and INFRA AQUA ECO.

Benefits
- Competitive pricing
- Proven and innovative technology
- Cast aluminum heat exchanger
- Robust
- Low-noise
- Advanced diagnostic system
- Very low maintenance interval
- Low service interval
- Integrated pump control
- Closed version available
- Cascade control already integrated
- Weather-dependant control
- Control:
  - On/off thermostat
  - OpenTherm
  - BMS 0-10V control

Technical information

POWERFLEX		HR 340	HR 425	HR 510	HR 600
Nominal input	kW	340	425	510	600
Efficiency	%	107	107	107,5	107,5
Operating pressure	bar	6	6	6	6
Weight	kg	330	365	429	464
Flange manifold 2 x		5,74	5,74	5,74	5,74
Supply voltage		230V 1F ~50 Hz			

mark®

Dimensions

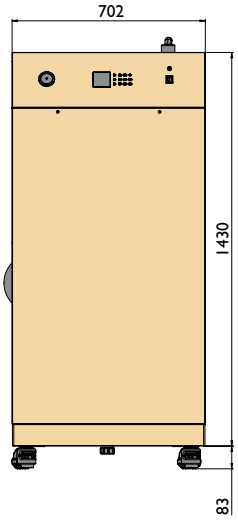

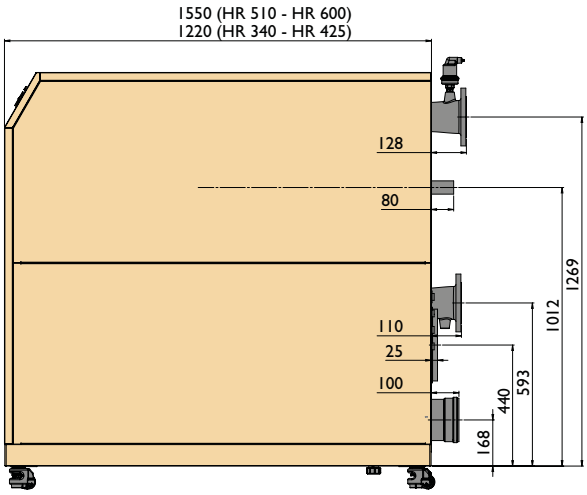

a = Flue gas ø 250mm
b = Supply DN100 PN6
c = Gas connection R1,5”
d = Return DN100 PN6
e = Combustion air inlet ø 150mm

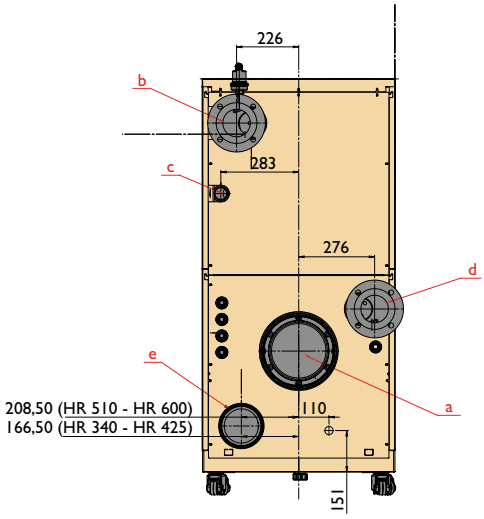

Controls

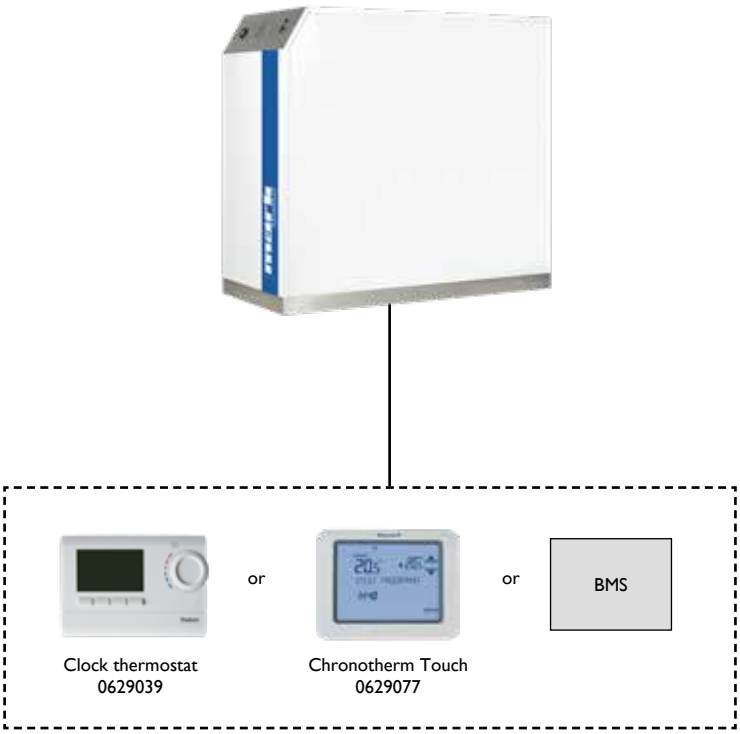

Prices Mark POWERFLEX

PRODUCT - POWERFLEX - NATURAL GAS G25

Code nr.	Description	Price
5970010	PowerFlex HR 340	€ 20843
5970011	PowerFlex HR 425	€ 24510
5970012	PowerFlex HR 510	€ 25862
5970013	PowerFlex HR 600	€ 28756

Other gas types on request.

ACCESSOIRES - CONTROLS

Code nr.	Description	Price
0629077	Chronotherm Touch (modulating) thermostat	€ 272
0629039	Clock thermostat (1A)	€ 350

Circulation pump on request

ACCESSOIRES - FLUE GAS EXHAUST

Code nr.	Description	Price
5990301	Wall bracket Ø150	€ 5
5990302	TwinSafe + Extension pipe RVS Ø100/150	€ 98
5990303	Sealing EPDM Ø150	€ 8
5990304	Roof flashing PB Ø205 25-45	€ 297
5990305	Adhesive plate ALU Ø370	€ 162
5990306	ALU-Fix Bend AL Ø250 90gr	€ 356
5990307	ALU Fix Bend Ø250 45gr	€ 328
5990308	ALU Fix Extension pipe Ø250 L=1000	€ 183
5990310	ALU Fix Roof terminal AL Ø250 L=1450	€ 891
5990311	Twinline Reducer PP Ø130-150	€ 36
5990312	Air grill AL Ø150 L=180	€ 61
5990313	Roof terminal ALU Ø250 L=2500	€ 1304
5990314	T-piece ALU Ø250-200-350 90gr	€ 371
5990316	ALU Fix Bend AL Ø250 90gr	€ 356
5990317	ALU Fix Bend AL Ø250 45gr	€ 328
5990318	ALU Fix Extension pipe AL Ø250 L=100	€ 194
5990319	Twinline Bend PP Ø200 90gr	€ 98
5990320	Twinline Bend PP Ø200 45gr	€ 89
5990321	Twinline Extension pipe PP Ø200 L=1900	€ 242
5990322	Twinline Extension pipe PP Ø200 L=1000	€ 119
5990323	Twinline Extension pipe PP Ø200 L=500	€ 107
5990324	Twinline Roof terminal PP Ø200 L=500	€ 463
5990326	Bracket Ø200	€ 26
5990327	Fix-Safe Sealing ring Ø250	€ 64
5990328	Sealing ring Sil. Ø200 Blauw	€ 22
5990329	Sealing ring EPDM Ø200	€ 14
5990330	Adhesive plate ALU Ø275	€ 79
5990331	Twinline Bend PP Ø150 90gr	€ 50
5990332	Twinline Bend PP Ø150 45gr	€ 41
5990333	Twinline Extension pipe PP Ø150 L=2000	€ 129
5990334	Twinline Extension pipe PP Ø150 L=1000	€ 72
5990335	Twinline Extension pipe PP Ø150 L=500	€ 50
5990336	Twinline Gradient PP Ø150-150	€ 94
5990337	Single flue set horizontal PP Ø150 black	€ 174
5990342	ALU-Fix Extension pipe AL Ø200 L=500	€ 179
5990343	ALU Fix Extension pipe AL Ø200 L=2000	€ 300
5990344	ALU Fix Bend AL Ø200 90gr	€ 194
5990345	Extension pipe AL Ø200 L=500	€ 95
5990346	Wall terminal AL M2000 Ø200 200-150	€ 924
5990347	Connection kit PP DN200 Compact Condens	€ 397
5990348	Adhesive plate AL Ø210 130/200x150	€ 43
5990349	Adhesive plate AL Ø320	€ 140
5990350	Roof flashing for pitched roof PB Ø318 18-22gr	€ 317
5990351	Roof flashing for pitched roof PB Ø318 58-62gr	€ 350
5990352	Adhesive plate AL Ø150/220x175	€ 62
5990353	Roof flashing for pitched roof PB Ø228 18-22gr	€ 281

MEGAFLEX

BOILER

The high-efficiency boiler of Mark

The Mark MEGAFLEX is a very compact and sustainable high-efficiency boiler for industrial use. Available in capacities of 850 kW and 1020 kW.

The MEGAFLEX is suitable to heat offices, garages, warehouses, apartment buildings, workshops, distribution centers and showrooms.

For a complete heating solution from Mark it is also possible to combine the MEGAFLEX boiler with water-supplied products such as the TANNER MDA and INFRA AQUA ECO.

Benefits
- Competitive pricing
- Proven and innovative technology
- Cast aluminum heat exchanger
- Robust
- Low-noise
- Advanced diagnostic system
- Very low maintenance interval
- Low service interval
- Integrated pump control
- Closed version available
- Cascade control already integrated
- Weather-dependant control
- Control:
  - On/off thermostat
  - OpenTherm
  - BMS 0-10V control

Technical information

MEGAFLEX		HR 850	HR 1020
Nominal input	kW	850	1020
Efficiency	%	107	107
Operating pressure	bar	6	6
Weight	kg	348,4	412,6
Supply voltage		400V~3N/10	

mark®

Dimensions

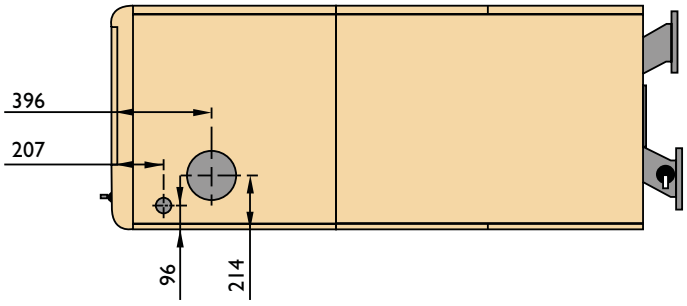

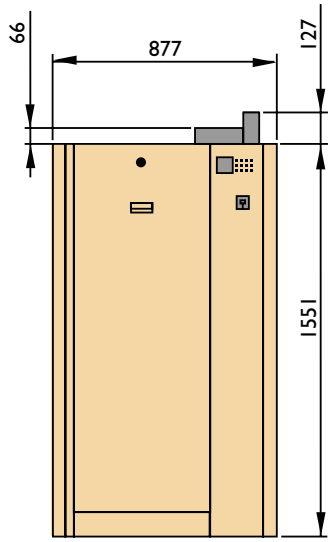

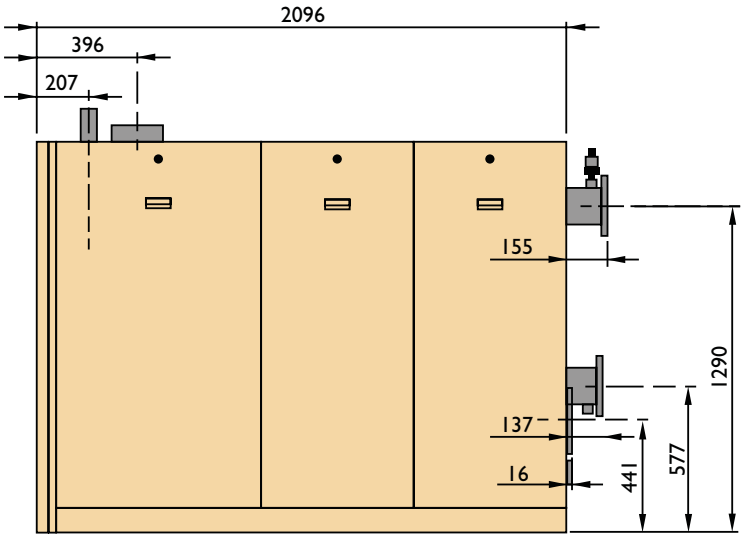

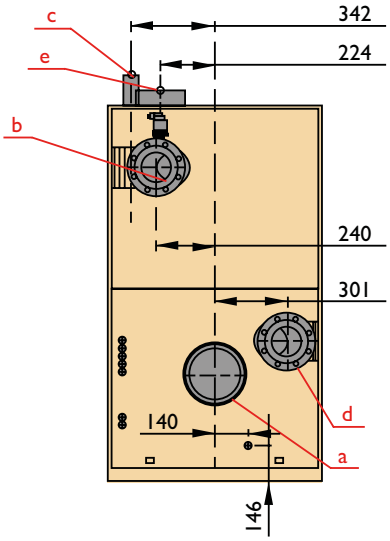

a = Flue gas ø 250mm
b = Supply DN125 PN6
c = Gas connection R2,0"
d = Return DN125 PN6
e = Combustion air inlet ø 200mm

Controls

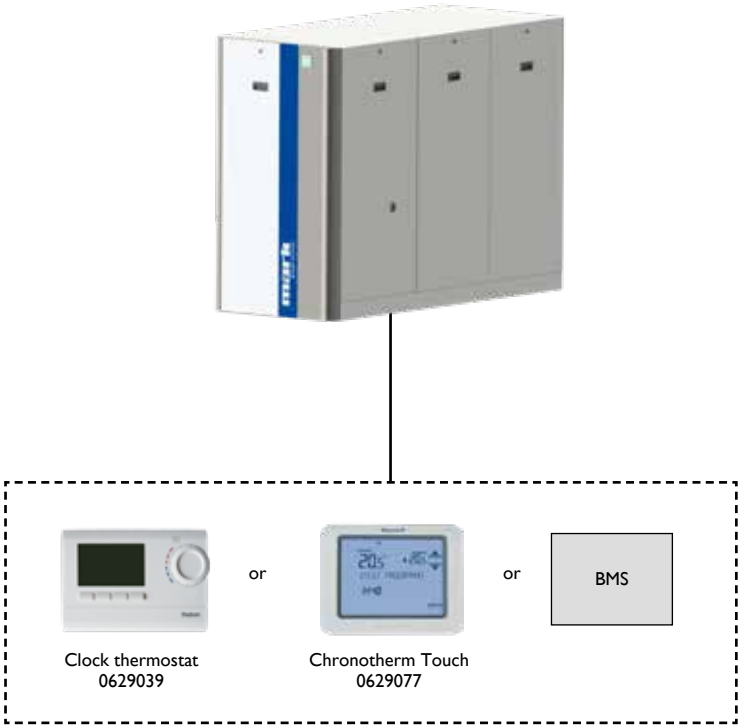

Prices Mark MEGAFLEX

PRODUCT - MEGAFLEX - NATURAL GAS G25

Code nr.	Description	Price
5970051	MegaFlex HR 850	€ 46892
5970052	MegaFlex HR 1020	€ 50245

Other gas types on request.

ACCESSOIRES - CONTROLS

Code nr.	Description	Price
0629077	Chronotherm Touch (modulating) thermostat	€ 272
0629039	Clock thermostat (1A)	€ 350

Circulation pump on request

ACCESSOIRES - FLUE GAS EXHAUST

Code nr.	Description	Price
5990301	Wall bracket Ø150	€ 5
5990302	TwinSafe + Extension pipe RVS Ø100/150	€ 98
5990303	Sealing EPDM Ø150	€ 8
5990304	Roof flashing PB Ø205 25-45	€ 297
5990305	Adhesive plate ALU Ø370	€ 162
5990306	ALU-Fix Bend AL Ø250 90gr	€ 356
5990307	ALU Fix Bend Ø250 45gr	€ 328
5990308	ALU Fix Extension pipe Ø250 L=1000	€ 183
5990310	ALU Fix Roof terminal AL Ø250 L=1450	€ 891
5990311	Twinline Reducer PP Ø130-150	€ 36
5990312	Air grill AL Ø150 L=180	€ 61
5990313	Roof terminal ALU Ø250 L=2500	€ 1304
5990314	T-piece ALU Ø250-200-350 90gr	€ 371
5990316	ALU Fix Bend AL Ø250 90gr	€ 356
5990317	ALU Fix Bend AL Ø250 45gr	€ 328
5990318	ALU Fix Extension pipe AL Ø250 L=100	€ 194
5990319	Twinline Bend PP Ø200 90gr	€ 98
5990320	Twinline Bend PP Ø200 45gr	€ 89
5990321	Twinline Extension pipe PP Ø200 L=1900	€ 242
5990322	Twinline Extension pipe PP Ø200 L=1000	€ 119
5990323	Twinline Extension pipe PP Ø200 L=500	€ 107
5990324	Twinline Roof terminal PP Ø200 L=500	€ 463
5990326	Bracket Ø200	€ 26
5990327	Fix-Safe Sealing ring Ø250	€ 64
5990328	Sealing ring Sil. Ø200 Blauw	€ 22
5990329	Sealing ring EPDM Ø200	€ 14
5990330	Adhesive plate ALU Ø275	€ 79
5990331	Twinline Bend PP Ø150 90gr	€ 50
5990332	Twinline Bend PP Ø150 45gr	€ 41
5990333	Twinline Extension pipe PP Ø150 L=2000	€ 129
5990334	Twinline Extension pipe PP Ø150 L=1000	€ 72
5990335	Twinline Extension pipe PP Ø150 L=500	€ 50
5990336	Twinline Gradient PP Ø150-150	€ 94
5990337	Single flue set horizontal PP Ø150 black	€ 174
5990342	ALU-Fix Extension pipe AL Ø200 L=500	€ 179
5990343	ALU Fix Extension pipe AL Ø200 L=2000	€ 300
5990344	ALU Fix Bend AL Ø200 90gr	€ 194
5990345	Extension pipe AL Ø200 L=500	€ 95
5990346	Wall terminal AL M2000 Ø200 200-150	€ 924
5990347	Connection kit PP DN200 Compact Condens	€ 397
5990348	Adhesive plate AL Ø210 130/200x150	€ 43
5990349	Adhesive plate AL Ø320	€ 140
5990350	Roof flashing for pitched roof PB Ø318 18-22gr	€ 317
5990351	Roof flashing for pitched roof PB Ø318 58-62gr	€ 350
5990352	Adhesive plate AL Ø150/220x175	€ 62
5990353	Roof flashing for pitched roof PB Ø228 18-22gr	€ 281

The high-efficiency boiler of Mark

The Mark MAXIFLEX is a very compact and sustainable high-efficiency boiler for industrial use with a capacity of 2200 kW (2,2 MW).

The MAXIFLEX is suitable to heat offices, garages, warehouses, apartment buildings, workshops, distribution centers and showrooms.

For a complete heating solution from Mark it is also possible to combine the MAXIFLEX boiler with water-supplied products such as the TANNER MDA and INFRA AQUA ECO.

Benefits
– Competitive pricing
– Proven and innovative technology
– Cast aluminum heat exchanger
– Robust
– Low-noise
– Advanced diagnostic system
– Very low maintenance interval
– Low service interval
– Integrated pump control
– Closed version available
– Cascade control already integrated
– Weather-dependant control

– Control:
  • On/off thermostat
  • OpenTherm
  • BMS 0-10V control

Technical information

MAXIFLEX		HR 2200
Nominal input	kW	2200
Efficiency	%	107,5
Operating pressure	bar	6
Flue connection ø	mm	400
Weight	kg	1215
Supply voltage		230V 1F ~50 Hz

Dimensions

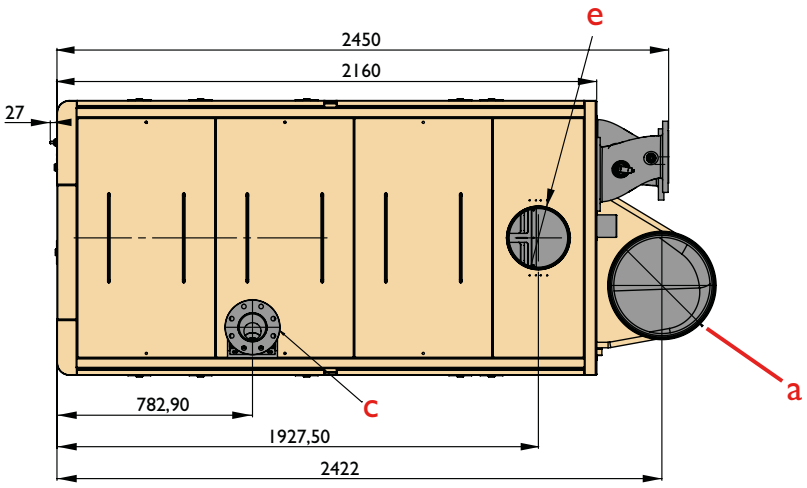

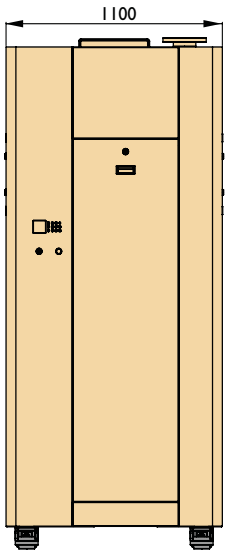

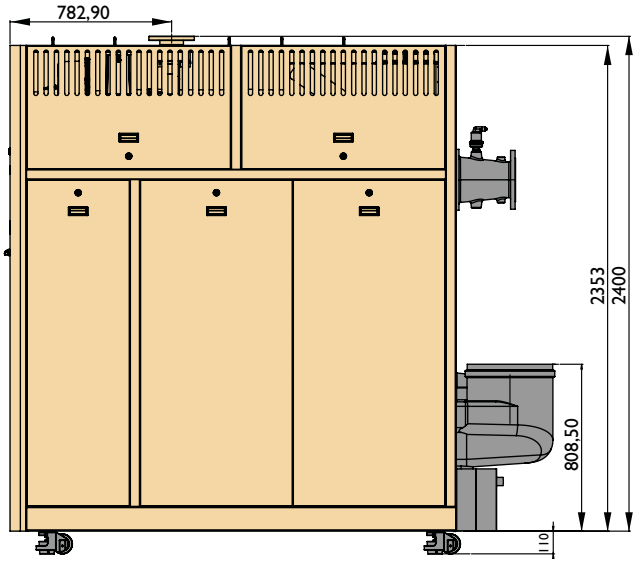

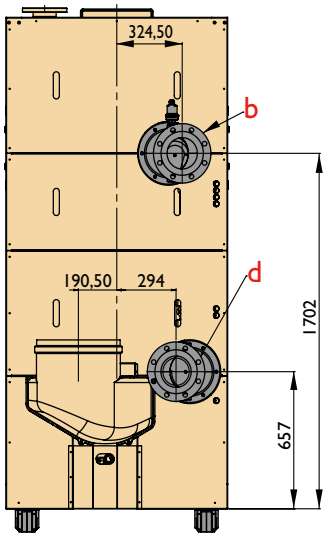

a = Flue gas ø 400 mm
b = Supply DN150 PN10
c = Gas connection R2,0"
d = Return DN150 PN10
e = Combustion air inlet ø 250 mm

Controls

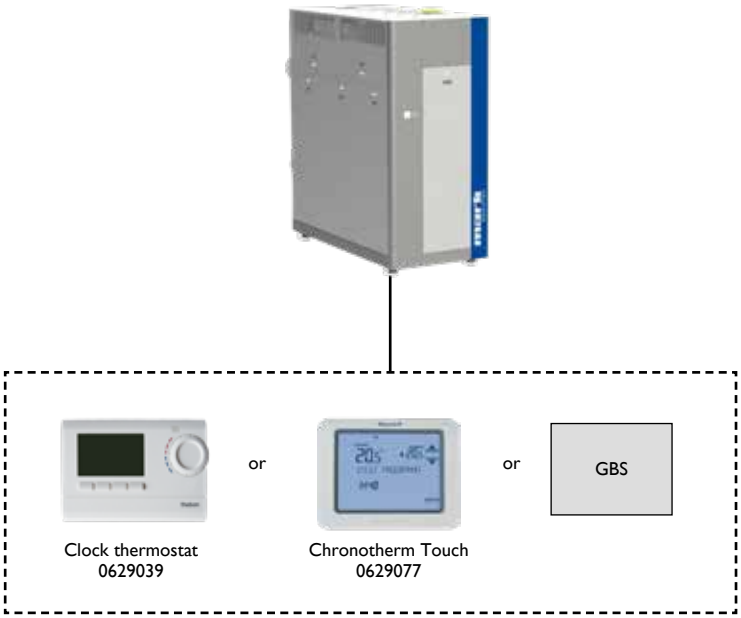

Prices Mark MAXIFLEX

PRODUCT - MAXIFLEX

Code nr.	Description	Price
5970053	MaxiFlex 2200 KW	€ 122130

Other gas types on request.

ACCESSOIRES - CONTROLS

Code nr.	Description	Price
0629077	Chronotherm Touch (modulating) thermostat	€ 272
0629039	Clock thermostat (1A)	€ 350

Circulation pump on request

ACCESSOIRES - FLUE GAS EXHAUST

Code nr.	Description	Price
5990301	Wall bracket Ø150	€ 5
5990302	TwinSafe + Extension pipe RVS Ø100/150	€ 98
5990303	Sealing EPDM Ø150	€ 8
5990304	Roof flashing PB Ø205 25-45	€ 297
5990305	Adhesive plate ALU Ø370	€ 162
5990306	ALU-Fix Bend AL Ø250 90gr	€ 356
5990307	ALU Fix Bend Ø250 45gr	€ 328
5990308	ALU Fix Extension pipe Ø250 L=1000	€ 183
5990310	ALU Fix Roof terminal AL Ø250 L=1450	€ 891
5990311	Twinline Reducer PP Ø130-150	€ 36
5990312	Air grill AL Ø150 L=180	€ 61
5990313	Roof terminal ALU Ø250 L=2500	€ 1304
5990314	T-piece ALU Ø250-200-350 90gr	€ 371
5990316	ALU Fix Bend AL Ø250 90gr	€ 356
5990317	ALU Fix Bend AL Ø250 45gr	€ 328
5990318	ALU Fix Extension pipe AL Ø250 L=100	€ 194
5990319	Twinline Bend PP Ø200 90gr	€ 98
5990320	Twinline Bend PP Ø200 45gr	€ 89
5990321	Twinline Extension pipe PP Ø200 L=1900	€ 242
5990322	Twinline Extension pipe PP Ø200 L=1000	€ 119
5990323	Twinline Extension pipe PP Ø200 L=500	€ 107
5990324	Twinline Roof terminal PP Ø200 L=500	€ 463
5990326	Bracket Ø200	€ 26
5990327	Fix-Safe Sealing ring Ø250	€ 64
5990328	Sealing ring Sil. Ø200 Blauw	€ 22
5990329	Sealing ring EPDM Ø200	€ 14
5990330	Adhesive plate ALU Ø275	€ 79
5990331	Twinline Bend PP Ø150 90gr	€ 50
5990332	Twinline Bend PP Ø150 45gr	€ 41
5990333	Twinline Extension pipe PP Ø150 L=2000	€ 129
5990334	Twinline Extension pipe PP Ø150 L=1000	€ 72
5990335	Twinline Extension pipe PP Ø150 L=500	€ 50
5990336	Twinline Gradient PP Ø150-150	€ 94
5990337	Single flue set horizontal PP Ø150 black	€ 174
5990342	ALU-Fix Extension pipe AL Ø200 L=500	€ 179
5990343	ALU Fix Extension pipe AL Ø200 L=2000	€ 300
5990344	ALU Fix Bend AL Ø200 90gr	€ 194
5990345	Extension pipe AL Ø200 L=500	€ 95
5990346	Wall terminal AL M2000 Ø200 200-150	€ 924
5990347	Connection kit PP DN200 Compact Condens	€ 397
5990348	Adhesive plate AL Ø210 130/200x150	€ 43
5990349	Adhesive plate AL Ø320	€ 140
5990350	Roof flashing for pitched roof PB Ø318 18-22gr	€ 317
5990351	Roof flashing for pitched roof PB Ø318 58-62gr	€ 350
5990352	Adhesive plate AL Ø150/220x175	€ 62
5990353	Roof flashing for pitched roof PB Ø228 18-22gr	€ 281

BENDER

BENDING MACHINE

The indestructible powerhouse

The Mark hydraulic bending machine is an indispensable tool for bending various tube materials with an external diameter from 3/8" to 4".

The bending machine is supplied in a wooden box, containing all the materials needed to build it. The machine can therefore be quickly put to work.

Features:
- Robust
- Long life
- Supplied in sturdy wooden box
- Low weight folding frame
- Open frame for repetitive bending work
- Manual and motor control
- Parts and repair kits available
- Stand available as an option

Technical information

Type		1023/1013					2023/2013							3013								
Standard bending jigs, bend	inch	3/8	1/2	3/4	1	1 1/4	3/8	1/2	3/4	1	1 1/4	1 1/2	2	3/8	1/2	3/4	1	1 1/4	1 1/2	2	2 1/2	3
90°, external diameter	mm	17.2	21.3	26.9	33.7	42.4	17.2	21.3	26.9	33.7	42.4	48.3	60.3	17.2	21.3	26.9	33.7	42.4	48.3	60.3	76.1	88.9
Wall thickness DIN 2440 (150 medium, ISO R65)	mm	2.35	2.65	2.65	3.25	3.25	2.35	2.65	2.65	3.25	3.25	3.25	3.65	2.35	2.65	2.65	3.25	3.25	3.25	3.65	3.65	4.05
Wall thickness DIN 2441 (150 heavy, ISO R65)	mm	2.9	3.25	3.25	4.05	4.05	2.9	3.25	3.25	4.05	4.05	4.05	4.50	2.9	3.25	3.25	4.05	4.05	4.05	4.05	4.50	4.85
Bending radii	mm	45	50	65	100	130	45	50	65	100	130	150	200	45	50	65	100	130	150	200	320	380
Standard equipment		5 bending jigs 2 bending blocks with dowel pins 1 U clamp					5 bending jigs 2 bending blocks with dowel pins 1 U clamp							5 bending jigs 2 bending blocks with dowel pins 1 U clamp								

Type		4013										1323					2323/2313						
Standard bending jigs, bend	inch	3/8	1/2	3/4	1	1 1/4	1 1/2	2	2 1/2	3	4	3/8	1/2	3/4	1	1 1/4	3/8	1/2	3/4	1	1 1/4	1 1/2	2
90°, external diameter	mm	17.2	21.3	26.9	33.7	42.4	48.3	60.3	76.1	88.9	114.3	17.2	21.3	26.9	33.7	42.4	17.2	21.3	26.9	33.7	42.4	48.3	60.3
Wall thickness DIN 2440 (150 medium, ISO R65)	mm	2.35	2.65	2.65	3.25	3.25	3.25	3.65	3.65	4.05	4.50	2.35	2.65	2.65	3.25	3.25	2.35	2.65	2.65	3.25	3.25	3.25	3.65
Wall thickness DIN 2441 (150 heavy, ISO R65)	mm	2.9	3.25	3.25	4.05	4.05	4.05	4.05	4.50	4.85	5.40	2.9	3.25	3.25	4.05	4.05	2.9	3.25	3.25	4.05	4.05	4.05	4.50
Bending radii	mm	45	50	65	100	130	150	200	320	380	600	45	50	65	100	130	45	50	65	100	130	150	200
Standard equipment		10 bending jigs 4 bending blocks 1 straightener 2 pins for pipe extrusion 4" 2 extension rams										5 bending jigs 2 bending blocks with dowel pins 1 U clamp					7 bending jigs 2 bending blocks with dowel pins 1 straightener 1 U clamp							

Type		3313									4313									
Standard bending jigs, bend	inch	3/8	1/2	3/4	1	1 1/4	1 1/2	2	2 1/2	3	3/8	1/2	3/4	1	1 1/4	1 1/2	2	2 1/2	3	4
90°, external diameter	mm	17.2	21.3	26.9	33.7	42.4	48.3	60.3	76.1	88.9	17.2	21.3	26.9	33.7	42.4	48.3	60.3	76.1	88.9	114.3
Wall thickness DIN 2440 (150 medium, ISO R65)	mm	2.35	2.65	2.65	3.25	3.25	3.25	3.65	3.65	4.05	2.35	2.65	2.65	3.25	3.25	3.25	3.65	3.65	4.05	4.50
Wall thickness DIN 2441 (150 heavy, ISO R65)	mm	2.9	3.25	3.25	4.05	4.05	4.05	4.50	4.50	4.85	2.9	3.25	3.25	4.05	4.05	4.05	4.50	4.50	4.85	5.40
Bending radii	mm	45	50	65	100	130	150	200	320	380	45	50	65	100	130	150	200	320	380	600
Standard equipment		9 bending jigs 2 bending blocks with dowel pins 1 straightener 1 U clamp 1 extension rams									10 bending jigs 4 bending blocks with dowel pins 1 straightener 2 extension rams									

Prices Mark BENDER

PRODUCT - BENDING MACHINES, COMPLETE WITH 90° FORMERS FOR GAS AND STEAM PIPES (STANDARD SUPPLY IN PORTABLE CONTAINER)

Code nr.	Description	Price
5001101	Hand-hydraulic Mark 1013, tip-up wing head 3/8 - 1 1/4”	€ 1156
5001102	Hand-hydraulic Mark 1023, open wing head 3/8 - 1 1/4”	€ 1217
5002201	Hand-hydraulic Mark 2013, tip-up wing head 3/8 - 2”	€ 1481
5002202	Hand-hydraulic Mark 2023, open wing head 3/8 - 2”	€ 1698
5003301	Hand-hydraulic Mark 3013, tip-up wing head 3/8 - 3”	€ 2143
5004401	Hand-hydraulic Mark 4013, tip-up wing head 3/8 - 4”	€ 9733
5001104	Electro hydraulic Mark 1323, open wing head 3/8 - 1 1/4”, 400V	€ 2542
5001114	Electro hydraulic Mark 1323, open wing head 3/8 - 1 1/4”, 230	€ 2675
5001124	Electro hydraulic Mark 1323, open wing head 3/8 - 1 1/4”, 115	€ 2812
5001106	Electro hydraulic Mark 2313, tip-up wing head 3/8 - 2”, 400V	€ 2613
5001116	Electro hydraulic Mark 2313, tip-up wing head 3/8 - 2”, 230V	€ 2801
5001126	Electro hydraulic Mark 2313, tip-up wing head 3/8 - 2”, 115V	€ 3005
5001105	Electro hydraulic Mark 2323, open wing head 3/8 - 2”, 400V	€ 2903
5001115	Electro hydraulic Mark 2323, open wing head 3/8 - 2”, 230V	€ 3115
5001125	Electro hydraulic Mark 2323, open wing head 3/8 - 2”, 115V	€ 3212
5001107	Electro hydraulic Mark 3313, tip-up wing head 3/8 - 3”, 400V	€ 3631
5001117	Electro hydraulic Mark 3313, tip-up wing head 3/8 - 3”, 230V	€ 3808
5001127	Electro hydraulic Mark 3313, tip-up wing head 3/8 - 3”, 115V	€ 3915
5001108	Electro hydraulic Mark 4313, tip-up wing head 3/8 - 4”, 400V	€ 11656
5001118	Electro hydraulic Mark 4313, tip-up wing head 3/8 - 4”, 230V	€ 12048
5001128	Electro hydraulic Mark 4313, tip-up wing head 3/8 - 4”, 115V	€ 12168

REMARK

For all accessories ask our sales department.

Mark takes care of it for you!

Devices can be regulated and controlled in various ways.
Each individual will have his own ideas and requirements. Mark has thus developed a range of options from standard to project-specific.

Our range includes various types of thermostats, speed controllers, packaged digital controllers and full custom made power and control panels, enabling the user to control a single unit or multiple units.

New in our range are the thermostats and controllers controlled via Internet (web-based). This allows remote connection with the thermostat via a web browser or mobile app. For example, you can operate or change the thermostat anywhere in the world with a telephone, tablet or laptop / PC.

Mark has its own electrical engineering and manufacturing department and is therefore able to offer a solution for any control requirement. Our engineers would be pleased to advise you.
Simply contact them to discuss the options within our range of control equipment.

Our range consists of:
- Full range of thermostats and sensors
- Time controls
- Digital time and temperature controllers
- Speed controllers including variable speed drives (VSD)
- Custom-made power and control panels

		
230 V ROOM THERMOSTAT	**230 V ROOM THERMOSTAT WITH SELECTOR, RESET BUTTON AND FAILURE LIGHT**	**CLOCK THERMOSTAT RAM 832**
Order code: 0629013	Order code: 0629048	Order code: 0629039
A room thermostat for 1 to 1 control of a device based on room temperature.	An extensive room thermostat with summer/winter switch, failure alert and reset button thermostat for 1 to 1 control of a device based on room temperature.	A digital clock thermostat for 1 to 1 control of a device based on room temperature.
Specifications: – Required temperature adjustable from 10…30°C. – Switch contact voltage free max. 4A / 230V.	Specifications: – Required temperature adjustable from 5…30°C. – Selector for burner on/off/heat out setting. – Selector for heat/ventilate or high/low. – Indicator lamp for burner trip – Reset button to reset a burner trip	Specifications: – Language can be set to English, German, Dutch, French, Italian or Spanish. – Switch contact, voltage free safety low tension max. 6A(1)/250V~ min. 1mA 5V. – Temperature measurement range 0…50°C increments of 0.1°C. – Temperature setting range 6…30°C in stages from 0.2°C. – 3 control programmes, 2 pre-programmed, 1 freely programmable with 22 memory points, programmable for Mon-Fri, Sat-Sun, every day or separate days. – Automatic switching between summer/winter. – Protection class IP20 in accordance with EN 60529 -1. – 2x alkaline batteries, 1.5V, type AA. – Power back up when battery replaced 10 minutes.
Can be used for: – G-TYPE – Tanner MDA (230V) – Tanner MDE – Tanner MDC (230V) – MDV Blue AC – Ecofan P – Fohn – 5-position controller 230V – High/low/off controller	Can be used for: – Infra Line	Can be used for: – Tanner MDA – Tanner MDE – Tanner MBA – 5-position controller 230V – High/low/off controller

		
ZONE CONTROL INFRA	**MARK PINTHERM CONNECT**	**MARK PINTHERM INFRA CONNECT**
WEB-BASED	**WEB-BASED**	**WEB-BASED**
Order code: 3003795	Order code: 0629108	Order code: 0629109
Digital temperature control suitable to on/off, high/low or modulated control multiple Infra's based on room temperature. With the ability for area control and PIN security to modify settings.	The PinTherm Connect is a digital week clock room thermostat. The controller is equipped with an on/off contact and a 0-10VDC output. Both signals are reversible, so the control is suitable for heating and cooling. The settings of the thermostat can be read and/or modified with Modbus or Ethernet. The thermostat can be connected to the BMS (building management system).	The PinTherm Infra Connect is a digital room thermostat to switch an Infra on/off or control high/low or modulating based on room temperature. The settings of the thermostat can be read and/or modified with Modbus or Ethernet. The thermostat can be connected to the BMS (building management system).
Specifications: – Delivery: Control panel with external display – Size ext. display (WxHxD): 160x98x43mm – Languages: English, French, German and Dutch – Protection class: IP20 – Mounting of display: built-in / wall installation – Number of areas: 3 – Number of Infra's per area: 6 – Temperature range: 2 / 40°C per 0,5°C. – Operating options: Auto, continuous day, continuous night or continuous off – Day-/night temperature monitoring with reading of the actual room temperature on the display – Automatic switching between summer/winter time. – Control: on/off, high/low or modulating – High/low control: Auto 1, 2 or 3K – Time switch with week program (7 switch blocks) – Overtime timer: 0-180 min. – Signaling of burner malfunction. – Reset option to release a burner malfunction per area. – PIN security to modify for example switching times and temperatures. – Temperature sensor: PT1000 (black bulb) to order seperately (required per area) – Modbus TCP/IP – Power: 230Vac / 50Hz – Embedded webserver	Specifications: – Power PinTherm Connect: 230Vac / 50Hz – Own consumption: < 9W – Clock: 24 hour clock with automatic summer/winter time switching – Switching programs: 3 switching programs a day – Switching differential: 0,1 - 3K – Dimensions: 166 x 160 x 106mm (bxwxh) – Weight: 880 grams – Protection class: IP54 – Installation environment: Transport/storage: -20°C until +70°C Operational: -10°C until +60°C Relative air humidity: 0-90% not condensating – Switch contact(s): Heating: 230Vac/16A (4A) Others: 230Vac/10A (2,5A) – Temperature setting: 0 until 39°C per 1°C adjustable – Overtime timer: adjustable 1, 2 or 3 hours (060, 120, 180) – Calibration: adjustable from -3.5°C until +3.5°C – Heating/cooling: Reversible contact for heating or cooling 0-10VDC output for heating or cooling – Languages: NL/EN/DE/FR/PL/RO/LT – Fuse: 6A	Specifications: – Power PinTherm Infra Connect : 230Vac / 50Hz – Own consumption: < 9W – Clock : 24 hour clock with automatic summer/winter time switching – Switching programs : 3 switching programs a day – Switching differential: 1°C – Dimensions: 166 x 160 x 106mm (bxwxh) – Weight: 880 grams – Protection class: IP-54 – Installation environment : Transport/storage: -20°C until +70°C Operational: -10°C until +60°C Relative air humidity: 0-90% not condensating – Switch contact(s): Heating: 230Vac/16A (4A) Others: 230Vac/10A (2,5A) – Temperature setting : 0 until 39°C per 1°C adjustable – Overtime timer : adjustable 1, 2 or 3 hours (060, 120, 180) – Calibration : adjustable from -3.5°C until +3.5°C – High/low switching: Temperature 1K, 2K, 3K or manual. PinTherm Infra Connect always starts 20 min on high a heat demand. – Languages : NL/EN/DE/FR/PL/RO/LT – Fuse: 6A
Can be used for: – Infra on/off and high/low model. – Infra Mono on/off and high/low model. – Infra HT	Can be used for: – G-Type – Tanner MDA / MDC / MBA – LDA Swirl – Ecofan W – MDV Blue – Fohn	Can be used for: – Infra on/off and high/low model. – Infra Mono on/off and high/low model. – Infra HT – Infra Line – Tanner MDE
Accessories: – External black bulb sensor Order code: 0629081 or 0629082	Accessories: – External room temperature sensor Order code: 0629086	Accessories: – External black bulb sensor Order code: 0629087 – External room temperature sensor Order code: 0629086

OPTITHERM+

WEB-BASED

Order code: 0629185

The OptiTherm+ is a digital clock thermostat with internal room sensor with which 1 or more air heaters (type GS+), up to a maximum of 8, can be controlled on the basis of the room temperature by means of a bus system.

Specifications:
- Push-button for switching the heating mode on and off.
- Push-button for switching the fan of the air heater(s) on and off.
- LED to indicate a malfunction along with notification on the display in the form of a failure code.
- Reset button to release a burner malfunction.
- An annual clock with 20 program blocks, clock program Mon-Fri, Tues-Fri, Sat-Son, daily or every day.
- Exceptional days, 20 program blocks, programmable by date, switching to daytime, eco or night-time temperature.
- 4 different operating modes (day, eco, night, frost).
- An overtime timer for switching to a different operating mode outside the switching times. Overtime timer freely adjustable from 15 min to 24 hours switching to daytime, eco or night-time temperature.
- Pin code protection to protect settings such as temperature, clock program, etc.
- Frost protection which automatically switches on the air heaters if the room temperature falls too far.
- Digital clock thermostat.
- Connection: bus system (2-wire).
- Dimensions: 129 x 129 x 20mm (lxwxh)
- Weight: 188 grams.
- Protection class: IP30.
- Ambient temperature: 0-40°C.
- Temperature setting: 0 to 40°C per 0.5°C can be set
- Time display: 24 hours
- Summer/winter: adjustable automatic/off
- Languages can be set to Dutch, English, German, French, Polish or Romanian
- External sensor: option of measuring the temperature per unit or on the basis of an average value.

Can be used for:
- GS+
- G(C)+
- GSX

Accesoires:
- External room sensor to be connected to the air heater. Order code 0629194
- Data cable 12,5 meter (3000600), 25 meter (3000601), 100 meter (3000602)

WATER-PROOF ROOM THERMOSTAT

Order code: 0629004

Water resistant (IP65) room thermostat with adjustable differential. Measures the temperature using a sensor filled with liquid connected to the thermostat with a capillary.

Specifications:
- Bulb sensor filled with liquid.
- Adjustment range from -5…+28°C.
- Differential adjustable from 2…8K.
- Material protection class and resistant to splashing in accordance with IP65.
- Switching power 230V~, 15(8)A.

Can be used for:
- Tanner MDE
- Tanner MDA
- Tanner MDC
- Tanner MBA
- 5-position controller 230V
- High/low/off controller

		
DESTRATIFICATION REGULATOR EDTR 6 230 V	**CHRONOTHERM TOUCH (MODULATING THERMOSTAT)**	**ROOM THERMOSTAT WITH SPEED CONTROL**
Order code: 0629099	Order code: 0629077	Order code: 5997350
Automatic energy-saving system for continuous control of ECOFAN ceiling fans depending on the temperature difference. Incl. two room temperature sensors, 1. room sensor in the lounge area, 2. room sensor in the ceiling area.	A programmable, modulating clock thermostat for modulating boilers, that control according to the OpenTherm®-communication protocol, as Mark EcoFlex, PowerFlex, MegaFlex and MaxiFlex. Operation is extremely easy through the touch screen.	Programmable room thermostat for speed control of appliances with an EC motor.
Specifications: – Power supply: 230/50 V/Hz – Max. flow: 6 A – Up to max. 14 x ECOFAN – Ambient temperature: 0-40 °C – Adjustment range: 3 °C – Protection class: IP54 – Weight: 1,25 kg – Dimensions: 135 x 250 x 115 mm (wxhxd)	Specifications: – Display: large touch screen with backlight. – The touch screen display can be locked in whole or in part. – Cleaning ability for the touch screen wihtout changing the settings. – Clock program: week program. – Adjustable up to 6 periods per day. – Possibility to program multiple days simultaneously. – Possibility to program a day off, holiday period or shiftwork. – Overtime timer easy to program. – Automatic switching between summer/winter. – Temperature range -4,5…+32˚C – Control: modulating. Self-learning and optimizing. – Weather-dependant control possible. – Fitted with a permanent memory which stores all saved settings. Only temporary settings are not memorized. – No battery power.	Specifications: – Power supply: 230V/50Hz, 230V/60Hz or 24V/60Hz – Protection class: IP30. – Room temperature adjustable from 0…40°C – Transport / storage temperature: -10…+50°C – Humidity limits: 20...80% RH (not condensing) – Dimensions: 132 x 87 x 23,6 mm (wxhxd) – Weight: 265 gram – Plastic housing in RAL 9003 – Wall mounting
Can be used for: – ECOFAN P140 (with AC motor) – ECOFAN W (with EC motor)	Can be used for: – EcoFlex – PowerFlex – MegaFlex – MaxiFlex	Can be used for: – Tanner CLA – Fan Coil

		
SURFACE CONTACT THERMOSTAT	**FROST PROTECTION THERMOSTAT**	**DIGITAL TIME CLOCK**
Order code: 0629180	Order code: 0629125	Order code: 0633030
Thermostat to start a water-supplied air heater, for example, when the water is at the required temperature.	Thermostat to protect against the danger of frost. Equipped with a bulb sensor which is active over the entire length.	Digital time switch to switch installations on and off or to control temperature reductions for the night or over the weekend.
Specifications: – Temperature adjustable from 20…90°C per 5°C. – Protection class IP40. – Voltage free exchange contact. – Switching power 24…230V~, 16(4)A, min. 150mA at 24V~. – Ambient temperature -35…+65°C. – Maximum sensor temperature 110°C. – Dimensions 38 x 48 x 103mm. – Process connection using the 220mm metal butterfly clips supplied.	Specifications: – Adjustment range from -10…+12°C. – Switch differential 1K. – Protection class IP40. – Voltage free exchange contact. – Switching power 24…230V~, 15(8)A, min. 150mA at 24V~. – Ambient temperature -9…+55°C. – Dimensions 105 x 112 x 55mm. – Colour grey (RAL 7035). – Copper capillary. – Capillary filled with Solkane R134a. – Capillary active across the entire length. – Capillary length 1.8m.	Specifications: – Simple to use. – 8 on/off cycles with 13 different day blocks, programmable by day or block of days. – 4 different operating positions: manually on constantly, manually off constantly, adjustable countdown timer, automatic operation in accordance with timer switching programme. – Integrated countdown timer. – Suitable for wall installation or installation on DIN rail. – Manual on/off. – Rapid summer/winter time switching. – Power reserve 72 hours. – Dimensions 78.8 x 106 x 56mm. – Protection degree IP20 in accordance with EN 60 529. – Operating voltage AC 230V -15…10%, 50/60Hz, 3.0VA. – Relay contact Q AC24…240V, DC 24V, max. 6(3)A.
Can be used for: – Tanner MDA – Tanner MDC – Tanner MBA – 5-position controller 230V – High/low/off controller	Can be used for: – Tanner MDA – Tanner MDC – 5-position controller 230V – High/low/off controller	

		
TEMPERATURE REGULATOR BLACK BULB	**OJ USER INTERFACE WITH TOUCH PANEL**	**CO_2 SENSOR**
Order code: 0631203	Order code: 0631374	Order code: 0629165 (wall installation)
Electronic on/off temperature regulator for DIN rail installation.	User friendly control panel for commissioning and setting the daily operation of the Mark Airstream. The control panel is very easy to use, thanks to the logical menu's, easy navigation and recognizable symbols.	Sensor that detects CO_2 content in the air. The detection range of this CO_2 sensor is calibrated for standard applications such as monitoring of residential rooms or conference rooms.
Specifications: – 230Vac, 50/60Hz power supply. – Motor rating ca. 2.8VA. – External sensor type NTC4. – Temperature setting range from 0…60°C. – Switch differential 0.5…5K adjustable – Switch contact exchange contact, voltage free. – Closing contact contact load 10(3)A, 250V. – Normally closed contact load 5(1.5)A, 250V. – Equipped with LED indicator when contact switched in (relay). – Protection class IP20. – Ambient temperature -10…+50. – Dimensions 36 x 86 x 62.5mm. – Connecting terminals 0.25…2.5mm². External sensor 06 29 000 – Measurement range -35…100°C. – Protection class IP30. – Cables between regulator and sensor maximum 50m. – Dimensions 74 x 74 x 41.5mm.	Specifications: – 3.5" color Touchscreen. – Easy navigation through grafic interface. – Connection and installation through Modbus. – Mounting on the Airstream or wall is possible. – QuickPlug™ installation. – All system parameters are visible to each user. – Only authorised users can change the system parameters. Access to the control system can be granted for 2 different levels: • User • Installer – Voltage24V DC, ±15% – Consumed current max 37,5 mA – Modbus RS-485, 115 kBaud – Modbus connection 2 x RJ12 6/6 – Max. cable length 50 m (in low EMC environment) – Ambient temperature -10°C /+40°C – Air humidity 0-95% (not condensing) – Dimensions 80 x 121 x 42 – Modbus cable MPFK6S – Density class IP21 – Weight 190 g	Specifications: – Power supply 24V AC/DC. – Several measurement ranges possible: 0...2000ppm, 0...5000 ppm, 0...10000ppm. – Output signal 0...10V. – Measuring accuracy: +/- 70ppm plus 5% of measured value. – Pressure dependence: +/- 1,6% / kPa. – Warm-up time: approximately 1 hour. – Ambient temperature: 0...50°C – Reaction time: approximately 1 minute. – Electrical connection: 0,14 - 1,5 mm2. – Plastic enclosure (RAL 9010). – Dimensions 98 x 106 x 32 mm.
Can be used for: – Infra	Can be used for: – Airstream	Can be used for: – Airstream
Accessories: – Black bulb sensor 06 29 000		

		
5-POSITION TRANSFORMER REGULATOR 230V	**5-POSITION TRANSFORMER REGULATOR 400V**	**HIGH/LOW/OFF REGULATOR 400V**
Order code: 6A 0616186 6A 3003096 (Ecofan W142) 12A 0616188 12A 3003097 (Ecofan W142) 14A 0616189 14A 3003098 (Ecofan W142)	Order code: 2A 0616162 - IP54 4A 0616164 - IP21 7A 0616166 - IP21	Order code: 7A 0616170
Regulator to regulate the speed of 1~230V voltage adjustable fan motors.	Regulator to regulate the speed of 3~400V voltage adjustable fan motors.	Regulator to manually switch 3~400V fan motors in Y/Δ to high/low.
Specifications: – Option to connect several fans with the maximum connection current. – Protection class IP54. – Selector to switch the fan to 6 positions, including off. – Green operating lamp. – Option to connect a room and/or construction thermostat. – Option to control an air valve for example via a co-switching contact (max 2A). – Motor protection via thermo contacts (not for PTC thermister). The regulator switches off automatically in the case of overload.	Specifications: – Option to connect several fans with the maximum connection current. – Protection class IP54/IP21. – Selector to switch the fan to 6 positions, including off. – Green operating lamp. – Option to connect a room and/or construction thermostat. – Option to control an air valve for example via a co-switching contact (max 2A). – Motor protection via thermo contacts (not for PTC thermister). The regulator switches off automatically in the case of overload.	Specifications: – Option to connect several fans with the maximum connection current. – Protection class IP54. – A selector to switch the fan to high, low and off. – A green operating lamp. – The option to connect a room and/or construction thermostat. – The option to control an air valve for example via a co-switching contact (max 2A). – Motor protection via thermo contacts (not for PTC thermister). The regulator switches off automatically in the case of overload.
Can be used for: – Tanner MDA (230V) – MDV Blue (230V) – Ecofan W – Ecofan P (6A)	Can be used for: – Tanner MDA (400V) – MDV Blue (400V) – Easyair T200	Can be used for: – Tanner MDA (400V) – Easyair T200

		
GTC 1/II	**GTC 11E**	**3-POSITION SELECTOR MDC 230V**
Order code: 0699205, 0699206, 0699207, 0699208,	Order code: 0699204	Order code: 0631175
5-position regulator to control the hot water air curtain fan on the EASYAIR P model with doorcontact control. Including temp. sensor	Electronic regulator for control of the EASYAIR E electric air curtain. Including temp. sensor	Selector to switch the fan on the MCB 230V to 3 positions.
Specifications: – Dimensions 150x95x30 mm. – Equipped with color display. – Adjustable languages: NL/FR/ENG/DE/IT/PL – Parallel switching of max. 10 air curtains possible. – Fan mode 1-5 selectable – In case of a power failure, the settings remain saved. – Features automatic operation: - By means of a door contact control. - By means of a door contact control and room thermostat. - By means of a door contact and cooling control security.	Specifications: – Dimensions 150x95x30 mm. – Equipped with color display. – Adjustable languages: NL/FR/ENG/DE/IT/PL/DK – Parallel switching of max. 10 air curtains possible. – Operating mode: manually or by means of set timer. – Fan mode 1-5 selectable – Heating mode 1-3 (depending on the fan speed) – In case of a power failure, the settings remain saved. – Fault signal of the external frost thermostat on display. – Features automatic operation: - By means of a door contact control. - By means of cooling control security. - By means of a door contact and cooling control security. - By means of room thermostat.	
Can be used for: – EASYAIR P model	Can be used for: – EASYAIR E model	Can be used for: – Tanner MDC (230V) – In combination with MDC 230V motor control Order code: 3003500

		
SPEED CONTROLLER	**INTERFACE+**	**PRESSURE SENSOR**
Order code: 0616040	Order code: 0629188	Order code: 3004561 (230V) 3004560 (400V)
Controller P140 for 9 fans.	An Interface+ can be used in two ways. 1. Power control: An externally supplied 0-10VDC signal is converted into a power control of the burner. With an Interface+ module, one G(S)+ can be controlled. Potential free entry: Reset Potential free exits: Malfunction Operation 2. Connection BMS (building management system): Settings, actual temperatures and fault codes can be read using Modbus. Settings of the OptiTherm+ can be modified.	To control an EC-fan based on pressure.
Specifications: – On/off button – Selector to switch the fan to 10 different positions, from low to high. – Power supply: 230/1 Ph/50Hz – Max amperage: 6 A – Up to max. 9 fans – Ambient temperature: 0-40 °C – Dimensions surface mounting: 108x108x60 (lxwxh) – Dimensions flush mounting: 108x108x55 (lxwxh)	Specifications: – Wiring: Shielded data cable (between Interface+ and air heater) – Dimensions: 109x154x49 mm (lxwxh) – Weight: 498 grams – Degree of protection: IP20 – Ambient temperature: 0-40°C	Specifications: – Measuring range: 0-2500Pa – Accuracy: 0,5% * measured value ±2,5Pa – Maximum pressure: 20kPA – Dimensions: 91x75x38mm (wxhxd) – Ambient temperature: -20 / +40°C (operation) 0 / +50°C (display) – Humidity environment: 10-95 %RH – Protection class: IP54 – Weight: 110 grams – Output: 0-10Vdc, 2-10Vdc, 0-20mA, 4-20mA"
Can be used for: – Ecofan P140	Can be used for: – GS+ – G(C)+ – GSX	Can be used for: – MDV Blue EC

		
POTENTIOMETER WITH ON/OFF CONTACT	**MULTI-FUNCTIONAL CONTROLLER 230V WITH INTEGRATED DISPLAY**	**ROOM PRESENCE SENSOR FOR MULTI-FUNCTIONAL CONTROLLER**
Order code: 0631390	Order code: 0629400	Order code: 0629414
To variable control the MDV Blue EC fan through a 0-10V signal.	Controller to control MDV Blue fans on the basis of temperature and CO_2, constant flow, constant pressure, constant humidity, constant CO_2, CO_2 and temperature.	PIR presence sensor for mounting on the wall.
Specifications: – Type: 10K – Resistance: 10kOhm (-20% / +20%) – Contact load: 1A 230Vac – Ambient temperature: 35°C – Protection class: IP54 built-on, IP44 built-in – Weight: 145 grams – Color: RAL 9010 – Housing: Plastic ASA – Mounting: built-in or built-on	Specifications: – Power supply: 230Vac ±10% – Protection class: IP40 – Dimensions (wxhxd): 87x87x42mm – Modbus: RS485 connection (slave) – Temperature range: 0-50°C – Languages: English, German, Danish and Swedish – Easy to operate – Contrast adjustable – Menu password protection is possible – Output: 0-10V – Relay contact: NO 250Vac 5.0A-AC1 – With overtime timer adjustable 0-240min – Suitable to connect a presence sensor, temperature sensor, CO_2 sensor, humidity sensor and pressure sensor. – Equipped with a switch with weekly program up to 10 blocks per day – Weight: 160 grams	Specifications: – Dimensions (wxhxd): 85x85x33mm – Angle: 90° – Distance: 5 meter – Switch-off delay: 15 sec. not adjustable – Protection class: IP20 – Temperature range: +10 / +30°C – The sensor measures the temperature changes to a limited distance from the front of the sensor. – Weight: 74 grams
Can be used for: – MDV Blue EC – Tanner MDA EC – LDA Swirl – Ecofan W EC	Can be used for: – MDV Blue AC – MDV Blue EC	Can be used for: – MDV Blue AC – MDV Blue EC

		
ROOM TEMPERATURE SENSOR IP20 FOR THE MULTI-FUNCTIONAL CONTROLLER	**TEMPERATURE SENSOR IP54 FOR THE MULTI-FUNCTIONAL CONTROLLER**	**ROOM CO_2 SENSOR FOR THE MULTI-FUNCTIONAL CONTROLLER**
Order code: 0629410	Order code: 0629411	Order code: 0629412
22K ohm NTC room temperature sensor for wall mounting in IP20 housing.	22K ohm NTC external room temperature sensor in IP54 housing.	To measure the CO_2 in a room.
Specifications: – Dimensions (wxhxd): 85x85x33mm – Temperature range: -20 / +40°C – Accuracy: ±1°C – Protection class: IP20, humid rooms area 3 – Sensor type: NTC 22K 2% – Mounting: Wall mounting – Weight: 88 grams	Specifications: – Dimensions (wxhxd): 80x80x55mm – Temperature range: -40 / +60°C – Accuracy: 2°C full range – Protection class: IP54 – Sensor type: NTC 22K 2% – Mounting: Wall mounting – Weight: 152 grams – Storage temperature: -40 / +80°C	Specifications: – Dimensions (wxhxd): 85x85x33mm – Measuring range: 0-2000 ppm – Accuracy: ±50ppm per 500ppm – Protection class: IP21 – Mounting: Wall mounting – Weight: 94 grams – Operating temperature: +10 / +60°C – Output: proportional 0-10V 15mA
Can be used for: – MDV Blue AC – MDV Blue EC	Can be used for: – MDV Blue AC – MDV Blue EC	Can be used for: – MDV Blue AC – MDV Blue EC

		
ROOM HUMIDITY SENSOR FOR THE MULTI-FUNCTIONAL CONTROLLER	**ACTIVE PRESSURE & FLOW SENSOR WITH DISPLAY**	**W9 G+**
Order code: 0629413	Order code: 3004506	Order code: Contact our sales department.
To measure the temperature and/or the relative humidity in a room.	Pressure sensor to monitor and control based on pressure difference or flow.	Switchbox for modulating regulation of 1 or more modulating air heaters based on room temperature.
Specifications: – Dimensions (wxhxd): 85x85x33mm – Room temperature: 0 / +60°C – Accuracy temp.: 0-10V = 0-50°C (max5mA) – Accuracy temp.: ±1°C – Humidity output: 0-10V = 0-100%RH (max 5mA) – Accuracy humidity: ±5% RH (10-90% RH) – Protection class: IP20, humid rooms area 3 – Sensor type: NTC 22K 2% – Mounting type: Wall mounting – Weight: 88 grams	Specifications: – Measuring range: 0-2500Pa – Accuracy: -20/+40°C ±3 % (> 350 Pa), ±10 Pa (< 350 Pa) – Maximum pressure: 20kPA – Dimensions: 91x75x36mm (wxhxd) – Room temperature: -20 / +40°C (operation) 0 / +50°C (display) – Protection class: IP54 – Weight: 110g – Output: 0-10Vdc, 2-10Vdc, 0-20mA, 4-20mA – K-factor: 0.1 to 9999 m^3/h can be modified to l/s. – Supply 24Vac ±15%, 50/60 Hz, 3.5-28Vdc – Setting pressure range: -50/+50 Pa, 0/100 Pa, 0/150 Pa, 0/300Pa, 0/500 Pa, 0/1000 Pa, 0/1600 Pa, 0/2500 Pa – Setting flow range: 100 m^3/h, 300 m^3/h, 500 m^3/h, 1000 m^3/h, 3000 m^3/h, 5000 m^3/h, 9999 m^3/h, 30.00 m^3/h x 1000, 50.00 m^3/h x 1000, 99.99 m^3/h x 1000	Specifications: – Steel box with cylinder lock – One 230V power supply group per device with a switchbox for several devices. – Digital time switch with weekly programme. – Day and night temperature regulator. – Holiday switch to operate devices at the night-time temperature over longer periods. – Overtime timer adjustable from midnight to 6.00 a.m. – Selector per device for “heat / off / ventilate”. – Illuminated reset button per device to indicate and reset a burner trip – A room temperature sensor supplied separately.
Can be used for: – MDV Blue AC – MDV Blue EC	Can be used for: – MDV Blue EC – Airstream	Can be used for: – GS+ – GC+

		
F4 230V	**F6 24V**	**F7**
Order code: 3002603	Order code: 3002607	Order code: 3002608
Switchbox to control a Föhn high/low model based on room temperature, with the option to switch the unit to low temporarily using a timer.	Switchbox to control a Föhn high/low model based on room temperature, with the option to switch the unit to low temporarily using a digital timer.	Switchbox to control a Föhn high/low model based on room temperature, with an additional control to restrict the temperature gradient. And the option to temporarily switch the device to low using a digital timer. The temperature gradient means that the heater starts on maximum, and heats at full power for 30 minutes with heating of 45K. If after 30 minutes the air drawn in is <12°C, the heater continues to heat on maximum. If the temperature of the air drawn in is >12°C, the heater operates on minimum, heating at 30K.

Specifications:
– Steel box with cylinder lock.
– Digital time switch with weekly programme.
– Regulator for day and night temperature.
– Holiday switch to enable devices to operate at the night-time temperature over longer periods.
– Digital timer to switch to the daytime mode temporarily outside the clock programme.
– Digital timer to switch the device to low temporarily.
– Selector for "heat / off / ventilate".
– Indicators for:
  – high
  – low
  – burner in operation
  – burner failure
– A room temperature sensor supplied separately.
	Specifications:
	– Steel box with cylinder lock.
	– Digital time switch with weekly programme.
	– Day and night temperature regulator.
	– Holiday switch to enable devices to operate at the night-time temperature over longer periods.
	– Digital timer to switch to the daytime mode temporarily outside the clock programme.
	– Digital timer to switch the device to low temporarily.
	– Selector for "heat / off / ventilate".
	– Indicators for:
	  – high
	  – low
	  – burner in operation
	  – burner failure
	– A room temperature sensor supplied separately.
		Specifications:
		– Steel box with cylinder lock.
		– Digital time switch with weekly programme.
		– Day and night temperature regulator.
		– A regulator to restrict the temperature gradient.
		– Holiday switch to enable devices to operate at the night-time temperature over longer periods.
		– Digital timer to switch to the daytime mode temporarily outside the clock programme.
		– Digital timer to switch the device to low temporarily.
		– Selector for "heat / off / ventilate".
		– Indicators for:
		  – high
		  – low
		  – burner in operation
		  – burner failure
		– A room temperature sensor supplied separately.

Can be used for: – Föhn	Can be used for: – Föhn	Can be used for: – Föhn

		
C10	**C12**	**C20**
Order code: 3004231	Order code: 3004233	Order code: 3004241
Switchbox for controlling a Calflo with on/off fan based on room temperature with minimum inlet temperature restriction.	Switchbox for controlling a Calflo with on/off fan based on room temperature with minimum inlet temperature restriction.	Switchbox for controlling a Calflo with high/low fan based on room temperature with minimum inlet temperature restriction.

Specifications:
– Steel box with cylinder lock
– Regulator for the room temperature and minimum inlet temperature restriction using 2-10Vdc control signal.
– Selector for heat/off/ventilate.
– Failure lamps for:
  – Burner failure
  – Intake air failure
  – Burner fan thermally off
  – Maximum failure
  – Dirty filter
– Operating lamps for:
  – Burner on
  – Burner in operation
  – Release of control
– Reset button to reset a burner failure.
– Voltage free contact to operate extraction (24Vmax).
– Voltage free contact (supply to third parties) to check whether extraction is operating.
– A room temperature sensor supplied separately.
– A duct temperature sensor supplied separately for the minimum inlet temperature restiction.
	Specifications:
	– Steel box with cylinder lock
	– Regulator for the room temperature and minimum inlet temperature restriction using 2-10Vdc control signal.
	– Selector for heat / off / ventilate.
	– Digital time switch with weekly programme.
	– Holiday switch to allow devices to operate at the night-time temperature over longer periods.
	– Overtime timer adjustable from midnight to 6.00 a.m.
	– Failure lamps for:
	  – Burner failure
	  – Intake air failure
	  – Burner fan thermally off
	  – Maximum/gas pressure failure
	  – Dirty filter failure
	– Operating lamps for:
	  – Burner on
	  – Burner in operation
	  – Supply fan on
	  – Release control
	– Reset button to reset a burner failure.
	– Voltage free contact to operate extraction (24Vmax).
	– Voltage free contact (supply to third parties) to check whether extraction is operating.
	– A room temperature sensor supplied separately.
	– A duct temperature sensor supplied separately for the minimum inlet temperature restiction.
		Specifications:
		– Steel box with cylinder lock
		– Regulator for the room temperature and minimum inlet temperature restriction using 2-10Vdc control signal.
		– Selector for heat / off / ventilate.
		– High/low selector supply fan selector.
		– Failure lamps for:
		  – Burner failure
		  – Intake air failure
		  – Burner fan thermally off
		  – Maximum/gas pressure failure
		  – Dirty filter
		– Operating lamps for:
		  – Burner on
		  – Burner in operation
		  – Supply fan low
		  – Supply fan high
		  – Release control
		– Reset button to reset a burner failure.
		– Voltage free contact to start extraction (24V max).
		– Voltage free contact to switch extraction to high (24V max).
		– Voltage free contact (supply to third parties) to check whether extraction is operating at low.
		– Voltage free contact (supply to third parties) to check whether extraction is operating at high.
		– A room temperature sensor supplied separately.
		– A duct temperature sensor supplied separately for the minimum inlet temperature restiction.

Can be used for: – Calflo on/off model	Can be used for: – Calflo on/off model	Can be used for: – Calflo high/low model

		
C22	**SLR ON/OFF**	**MDC 230V MOTOR CONTROL UPTO 3.0KW**
Order code: 3004243	Order code:	Order code: 3003500
Switchbox for controlling a Calflo with high/low fan based on room temperature with minimum inlet temperature restriction. With day/night temperature monitoring.	Switchbox for turning 1 or more Infra Lines on/off based on room temperature, with day/night temperature setting.	To be able to switch the 1~230V fan on the MDC. Plus the option to connect an external room thermostat and a 3-position selector for the fan.

Specifications:
– Steel box with cylinder lock.
– Regulator for the room temperature and minimum inlet temperature restriction using 2-10Vdc control signal.
– Selector for heat / off / ventilate.
– High/low selector supply fan selector.
– Digital time switch with weekly programme.
– A holiday switch to allow the device to be operated at the night-time temperature over longer periods.
– A digital timer (0-6 hours) to switch to the daytime mode temporarily outside the clock programme.
– Failure lamps to indicate:
  – Burner failure
  – Intake air failure
  – Burner fan thermally off
  – Maximum failure
  – Dirty filter
– Operating lamps to indicate:
  – Burner on
  – Burner in operation
  – Supply fan low
  – Supply fan high
  – Release control
– Reset button to reset a burner failure.
– Voltage free contact to start extraction (24V max).
– Voltage free contact to switch extraction to high (24V max).
– Voltage free contact (supply to third parties) to check whether extraction is operating at low.
– Voltage free contact (supply to third parties) to check whether extraction is operating at high.
– A room temperature sensor supplied separately.
– A duct temperature sensor supplied separately for the minimum inlet temperature restiction.
	Specifications:
	– Steel box with cylinder lock.
	– 230V supply group per device.
	– Digital time switch with weekly programme.
	– Day and night temperature control.
	– Holiday switch to allow devices to operate at the night-time temperature over longer periods.
	– Overtime timer from 0-6 hours.
	– Infra Line on/off selector per device.
	– Illuminated reset button per device to indicate and reset a burner trip.
	– A black bulb temperature sensor supplied separately.
		Specifications:
		– Steel box.
		– Solenoid switch to control the fan.
		– Connecting terminals for external room thermostat.
		– Connecting terminals for external 3-position selector.

Can be used for: – Calflo high/low model	Can be used for: – Infra Line on/off model	Can be used for: – Tanner MDC (230V)

		
MDC 400V MOTOR CONTROL		
Order code: 1.1kW 3003502 1.5kW 3003503 2.2kW 3003504 3.0kW 3003505		
To control the 3~400V fan on the MDC. Plus the option to connect an external room thermostat.		
Specifications: – Steel box. – Solenoid switch to control the fan. – Connecting terminals for an external room thermostat.		
Can be used for: – Tanner MDC (400V)		

Supply air systems on request

mark®